Stability and Simulation of Negative Feedback Audio Power Amplifier Circuits

A Guide for Electronic Engineering Students and Professionals

J E Green

March 2010

Contents

1. Introduction

This document is principally aimed at Electronic Engineering Students who are in the middle of their second year or higher. But it could be of considerable use to anyone working in baseband analogue feedback circuits. I have avoided mathematics where at all possible. As long as you have a reasonable grip on the *ideas* that underpin phasors and the complex representation of an impedance this document should not be taxing. I have also assumed familiarity with the common three stage audio power amplifier circuit.

…to This Document

The objective of this document is to discuss feedback in the context of audio frequency power amplifiers. This topic requires specific discussion quite apart from the large number of texts written on control systems. This is because the control systems approach relies on knowing the characteristics of the system. In the case of electronic amplifiers this information is not easily obtained; consequently, control systems methods are not often readily applied. Two good examples of control texts are Bishop and Dorf for mainly classical analogue control systems [1] and Lewis [2] for mainly digital control systems. Bishop and Dorf is my preferred undergraduate text on control systems.

I have tried to give more background information that is usual. As a result, I occasionally give my unreferenced opinion. I have elected not to write in the engineering style. Long technical papers tend to be quite dry and unreadable if only the facts are presented in the traditional third person 'engineering style'.

I have tried to provide extensive references with considerable variation on the style and content. There are references for historical reading, presently trading companies, computer programs, various examples and people, as well as the usual academic text books and journal papers. I don't intend that every reference should be dogmatically scrutinised. Some are there simply to provide examples of things I disagree with. Others to try to give the opportunity for the reader to find out some things that are intellectually 'off the beaten track'.

The document is split into seven principle parts:

- A description of Poles and Zeros from a circuit response point of view.
- A description of how a Bode plot works and an example of the link between open loop and closed loop response.
- Analysis of the stability of an amplifier using a Bode Plot of open loop gain, including the determination of the poles and zeros of the amplifier. This analysis also allows us to determine which poles and zeros belong to certain circuit blocks (e.g. differential amplifier, voltage amplifier, feedback network etc.)
- A section about things that are related to amplifiers but don't fit in anywhere else, including subjectivism and car audio.
- MATLAB simulation of an amplifier as an LTI system. In this section I show that the method from the third part provides a satisfactory description of the open and closed loop response of an amplifier by development of its characteristic equation.

- Small signal simulation of a amplifier using SPICE. In this part I show which parasitic elements in the circuit are responsible for the placement of the poles and zeros, down to the level of, for example, junction capacitances. This is helpful because we can develop a 'feel' for what will happen in our circuit due to our design choices. If the simulator shows us that we have problems, we'll know exactly where to look.
- Finally I discuss the method after Tian [3] for calculating the open loop response when the feedback loop is closed. The necessity of such a method will become clear over the intervening pages.

…to Reading

It is critically important to 'read around the subject', from a technical point of view and from a historical point of view. The accumulated knowledge of modern engineering science, the last 200 years or so, cannot be condensed into a lifetime much less a degree course. We will all be learning for our entire lives; there is no time to waste.

…to History

The history of engineering and the lives of the engineers and scientists that have significantly advanced the state of engineering science are at least as interesting as the discoveries and inventions themselves (sometimes more so). We are fortunate that the popular science and technical histories genre is particularly popular at the moment. So if you want to know:

- How Maxwell managed to get up for morning chapel while at Cambridge.
- How Faraday's religious beliefs shaped his view of magnetic fields as 'lines'.
- Why Joseph Henry gave Samuel Morse a perfected telegraph system for free, and permitted him to take credit for it.
- How Voltaire stole the idea of chemical batteries.
- Why Einstein thought his close friend more fortunate than himself.
- How Laplace nearly lost his head to the French Revolution.
- Why the friendship between Napoleon and Fourier was unchanged despite them being on opposite sides during the French revolution.
- How Joseph Boole was inadvertently killed by his wife.
- What Harold Black was doing when the idea of feedback came to him.
- Why Heisenberg needed help with his description of quantum mechanics.
- How Gauss, when aged around 6 years old, managed to sum the first hundred and one integers in less than 10 seconds, using mental arithmetic, and an insightful deduction.

You will have to get down to Waterstones, because not everything that is interesting comes in the form of lecture notes [4-17].

…to Practical Skills

An engineer should have mechanical and practical skill commensurate with their theoretical and mathematical ability. This is not optional, it is a requirement. There is little to be gained by designing top flight amplifiers if their practical realisation is beyond you. During the course of one engineering degree a student will face three or four projects. This is not nearly enough to provide sufficient practical experience across a wide range of design problems. Transistors and discrete components are very cheap, go and buy some. You can make an antenna to receive analogue radio AM & FM from a wire coat hanger. Learn by doing.

…to Finding Technical Articles and Journal Papers in Periodicals

This applies to University of Sheffield students only. When a journal paper is required, if a web address is not given, it can be found through MUSE. First log in, and then click on the "library" tab. Under the "Library eResources" panel, click "ejournals" then "Find it at Sheffield". It will be possible to enter the journal name followed by the year, volume, issue, and starting page. Not all of the periodicals that the university holds are stored electronically. If you can't find it using the above method it is possible to check if the university holds a paper copy of the article you require by using Star. This is especially useful for pre 1980 periodicals that are not IET or IEEE. For example a large back catalogue of the Bell System Technical Journal is held in the Western Bank Library stacks. A large back catalogue of Electronics and Wireless world, a magazine we will meet in due course, is also held there.

If you are interested in finding papers on a certain topic or by a particular author you can use a database such as "Web of Science". To access a database log in to MUSE. Click on the "library" tab. Under the "Library eResources" panel, click "subject databases". You can then find the database you require by name or by subject.

2. Feedback

Feedback in the most general sense is the application of a portion of the output of a system to its input in order to favourably enhance certain properties of the system.

2.1. Types of Feedback System

There are two major representations regarding feedback systems which are often discussed these are bilateral and unilateral.

Bilateral Feedback Representation

A bilateral feedback system has four important signals:

1. A signal travelling from the *input* towards the *output* via the forward path.
2. A signal travelling from the *output* towards the *input* via the feedback path.
3. A signal travelling from the *input* towards the *output* via the feedback path.
4. A signal travelling from the *output* towards the *input* via the forward path.

Signals 3 and 4 are usually unwanted. This bilateral representation is especially useful as frequency increases. At microwave frequencies, all feedback systems are considered bilateral. Hence a two port network has four S parameters. Bilateral systems are discussed a little in Grey, Hurst, Lewis & Meyer [18], see also Tian et al. [3].

Unilateral Feedback

The unilateral feedback system is the 'traditional' feedback system which only has the signals that we are interested in flowing in it:

1. A signal travelling from the *input* towards the *output* via the forward path.
2. A signal travelling from the *output* towards the *input* via the feedback path.

The forward path and the feedback path are assumed not to interact. The rest of this document discusses feedback from a unilateral point of view.

2.2. Generalised Unilateral Feedback System

The generalised feedback system is given in the block diagram of Figure 1. The forward path is G(jω). This contains everything in the amplifier except the feedback network. H(jω) is the feedback network which usually consists of two resistors (formed into a potential divider) in series with a capacitor to ground.

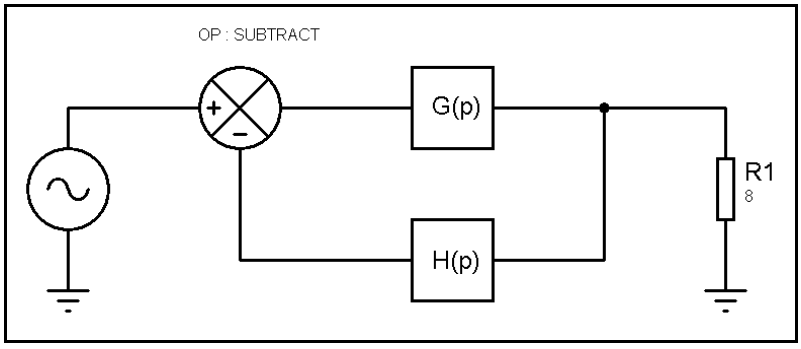

Figure 1: Generalised Feedback System p = jω

In this diagram the differential amplifier performs the subtracting function and possesses some gain. The gain is in the form of voltage input, current output (transconductance). The voltage amplifying stage and the output stage are completely contained within G(jω). All negative feedback systems, however many loops they possess, can be reduced to this form. Methods of reduction will be given in EEE342, but can be found in Bishop and Dorf [1].

The generalised feedback equation is:

$$\frac{V_{out}}{V_{in}} = \frac{G(j\omega)}{1 + G(j\omega)H(j\omega)}$$

2.3. Derivation and Application of Feedback

You may read in some texts that feedback was "parallel derived and series applied". Jones [19] is fond of this nomenclature. "Shunt derived and series applied", means the same thing. From an audio power amplifier point of view, the shunt derived part means that the feedback is taken in parallel to the output. The series applied part refers to the way the differential amplifier subtracts the feedback from the input signal. This description of feedback is best explained using two port networks. It is not necessary to understand how two ports work to understand feedback in Lin [20] style audio power amplifiers, the full treatment is in Grey [18].

3. The Control Systems Approach

Stability questions are often faced in control systems problems: for example, the regulation of temperature in a room. The regulation of the chain reaction in a nuclear power station is another, more critical, system. A favourite of textbooks is the control of a robot arm in a manufacturing plant [1-2].

In control systems problems it is common to find that the object being controlled is called the 'plant' and the circuitry that is doing the controlling is the 'controller'. The objective of the controller is usually to modify the open loop frequency (and time) domain response of the plant to produce a more desirable closed loop response. The principle behind control system design is to:

- Look at the open loop poles of your plant, and design a physical implementation of a feedback system, with a well defined transfer function, that will cause the input(s) your system is faced with to produce the desired output(s).

This is usually possible because the open loop response is easily measured. Consider a robot arm that fits windscreens into car body shells on a production line. You can run the motor (and so move the arm) with a suitably powerful signal generator and no feedback or controller at all. It is possible to measure the characteristics of this 'plant' in the open loop state. We could measure its step response or its frequency response and obtain the same information. EEE342 "Control Systems Design" looks at ways of doing this.

Unfortunately the same is not true of our Lin style [20] amplifier circuit. This is because:

- The feedback controls the DC operating conditions. This is often referred to as the "operating point" in the context of computer simulation of circuits, and also the "quiescent (no signal) point".
- The factors that determine the values of the open loop poles are not well defined in a physical implementation of a Lin style audio amplifier circuit.

Furthermore, in our amplifier stability problem we have no plant (loudspeaker) specifications, and we don't have a characteristic equation (transfer function) for our amplifier (controller). It is not possible to manufacture an accurately specified closed loop response with so little information.

Fortunately the exact closed loop response is not critical. We can limit ourselves to one question: "is the amplifier likely to oscillate?" As long as the amplifier is unlikely to oscillate and assuming sensible circuit design rules and construction procedures have been applied, there is no need to tailor a particular response from the amplifier.

The second point above regarding the difficulty in knowing the open loop pole locations warrants some explanation. An example parameter that we would need to know accurately, but can only estimate, is the collector base junction capacitance. We would need to do calculations for each transistor at its operating point. We could measure the collector – base capacitance of each transistor we intend to use for a range of biases. This is usually accomplished with a capacitance meter or an LCR meter. We could then calculate the DC bias will be on the collector base junction and obtain the capacitance. We could do this for each component and for all of the parasitic effects, including the wires (by treating them like transmission lines as

frequency increases). If we went to enough trouble and plugged all the values into a suitably equipped simulator, we could get a close approximation to the response of an amplifier. It would require a lot time and thought.

The problem of amplifier stability was explored in considerable detail by H. W. Bode [21] in the 1930s when he worked for Bell Telephone Labs. The name is Danish and the official pronunciation in English, according to Van Valkenburg, is "Boh-dee" [22].

3.1. The Invention of Electrical Feedback

The idea of electrical[1] feedback was invented by Harold S Black in 1927 [23-24]. He was reading the New York Times while travelling to work (also at Bell) on a ferry from New Jersey to Manhattan Island. He wrote the generalised feedback equation on the paper [17]. Feedback wasn't initially very popular; possibly because telephone repeater designers of the time were sceptical that very high gain feedback circuits could be made stable at all [25]. Bell systems also patented the idea, limiting its widespread use for a few years. Both men passed away in the 1980s having observed a revolution in electronic and control systems design as a result of their (and several other people's) ideas.

3.2. Analogue Integrated Circuit Simulation Models

On a brief aside, semiconductor IC design houses try to model analogue and digital circuits with a very high degree of accuracy. Often their models are provided by the company that will actually produce the chips (the foundry). The models are obtained by making devices in the fabrication process which will be modelled, and testing them to extract model parameters [26]. This is generally an expensive business. Even then it is necessary to build in some 'wiggle room' to the designs, so that even if the models are not perfect the chip will still work within specification. The simulators that are used in such companies are often based on SPICE (Simulation Program with Integrated Circuit Emphasis). A good example of a semiconductor company that outsources its production to a foundry is Jennic [27]. Their design offices are in Sheffield. More on IC design and fabrication can be found in "Introduction to VLSI" EEE310.

1 Other kinds of feedback considerably predate modern electronics, for example the "centrifugal governor" or "Watt governor" is a mechanical feedback system that regulates the operation of a steam engine. J. C. Maxwell (a chap worth reading about) worked on it for a while too.

4. Poles and Zeroes

It is not easy to produce an acceptable definition of a pole without recourse to complex analysis. Anyone saying that "it is a singularity in the complex s-plane" can have a house point for not using an equation or mentioning eigenvalues, but complex analysis is still lurking nearby. My question should really be, "how do poles (and zeros) relate to a circuit's operation?" It is the circuit operation that is interesting; the complex s-plane is just a helpful mathematical tool.

When we sweep from low to high frequencies the effect of passing a pole on the frequency response of a circuit is twofold:

- The magnitude of the output voltage will decrease at 20dB/decade as we pass the pole.
- The phase of the output voltage with respect to the input voltage will lag by 90° at a frequency considerably above the pole and, at the pole frequency, will lag by 45°.

When we sweep from low to high frequencies the effect of passing a zero on the frequency response of a circuit is similarly twofold:

- The magnitude of the output voltage will increase at 20dB/decade as we pass the zero.
- The phase of the output voltage with respect to the input voltage will lead by 90° at a frequency considerably above the zero and, at the zero frequency, will lead by 45°.

4.1. First Order Filter Example

Consider this first order filter:

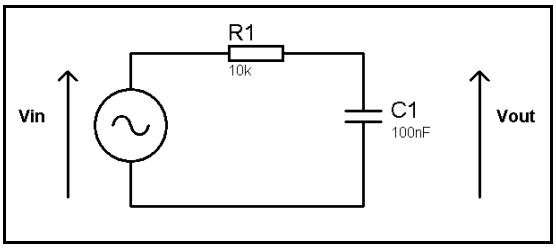

Figure 2: First Order Low Pass Filter

This circuit is a low pass filter. It has one pole and no zeros and k (the frequency independent gain) is unity. Its transfer function is:

$$\frac{V_{out}}{V_{in}} = \frac{1}{sC1R1 + 1}$$

Inserting the values given in the circuit diagram the pole lies at:

$$\left(s + \frac{1}{C1R1}\right) = 0$$

$$s = -1000 \quad \text{radians / second}$$

On a polar plot of the complex s plane (Figure 3) the pole lies on the real axis at -1000 radians per second. This diagram is sometimes referred to as a pole zero plot,

especially when discussing computerised circuit simulation. We should not be surprised that the pole is in the left part of the s-plane. Poles in the right half plane indicate instability. The interesting thing is that the position of the pole is given by equating the denominator to zero. We find the roots of the denominator of the transfer function when we find the pole(s). Poles occur where the denominator of the transfer function is equal to zero. This makes the transfer function undefined because division by zero has occurred, hence the singularity in the s-plane. Zeroes occur at the locations where the numerator becomes zero.

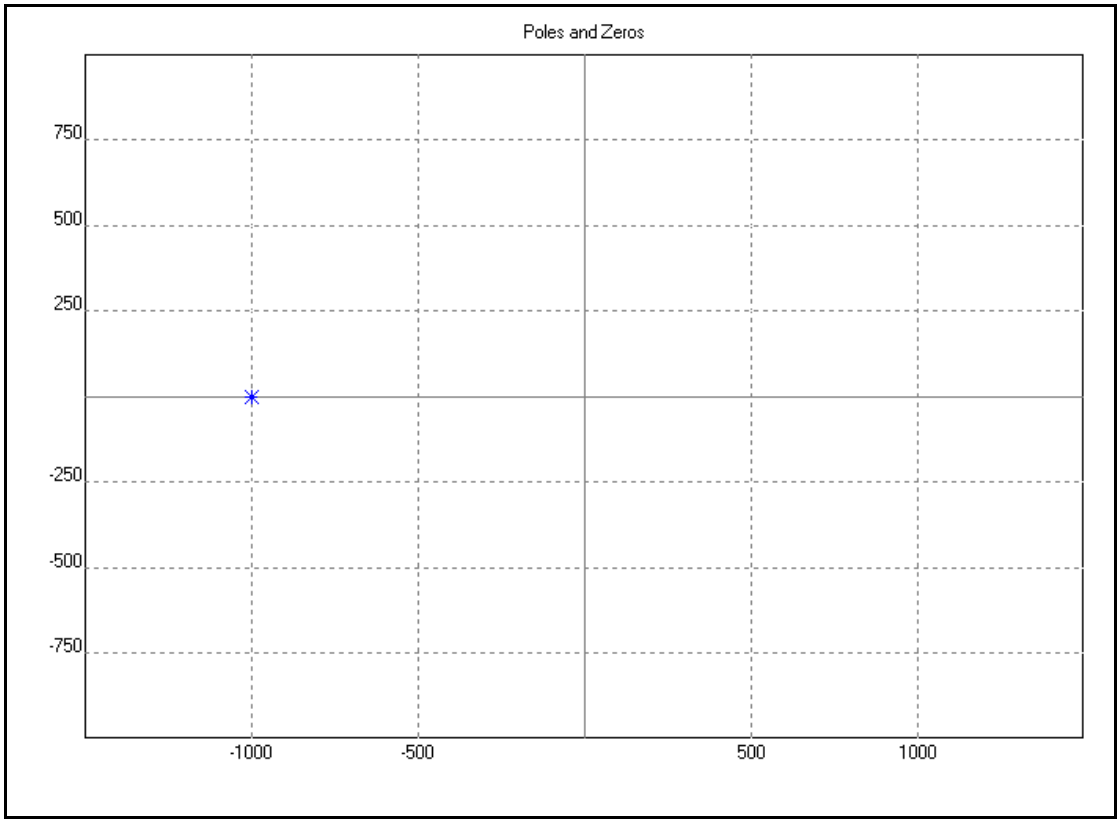

Figure 3: Pole Zero plot for a first order low pass filter. Axes are in radians per second, x axis is real, y axis is imaginary

4.2. Second Order Filter Example

This example is a high pass RLC filter. From the standard form of the transfer function of a second order high pass filter we should expect two zeros because it has s^2 in the numerator. We should expect two poles because it is second order and therefore the highest power of s in the denominator is two.

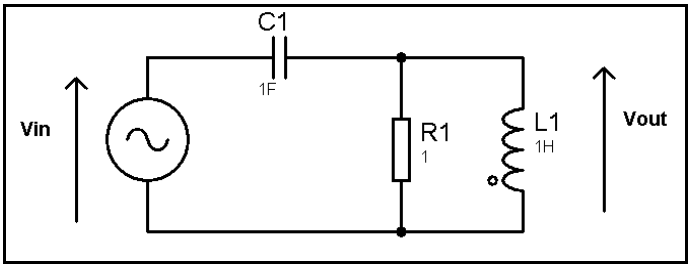

Figure 4: Second order high pass filter

The transfer function for this second order high pass circuit is:

$$\frac{V_{out}}{V_{in}} = \frac{s^2 LC}{s^2 LC + \frac{sL}{R} + 1}$$

Inserting the values from Figure 4 and factoring the denominator gives the poles. If you are familiar with EEE201 "Signals and Systems", or similarly titled undergraduate engineering courses [28], you should recognise that these are a pair of complex conjugate poles.

$$\left(s + 0.5 - j\frac{\sqrt{3}}{2}\right)\left(s + 0.5 + j\frac{\sqrt{3}}{2}\right) = 0$$

$$-0.5 + j\frac{\sqrt{3}}{2}, -0.5 - j\frac{\sqrt{3}}{2}$$

From the top of the transfer function the two zeros both occur at the origin.

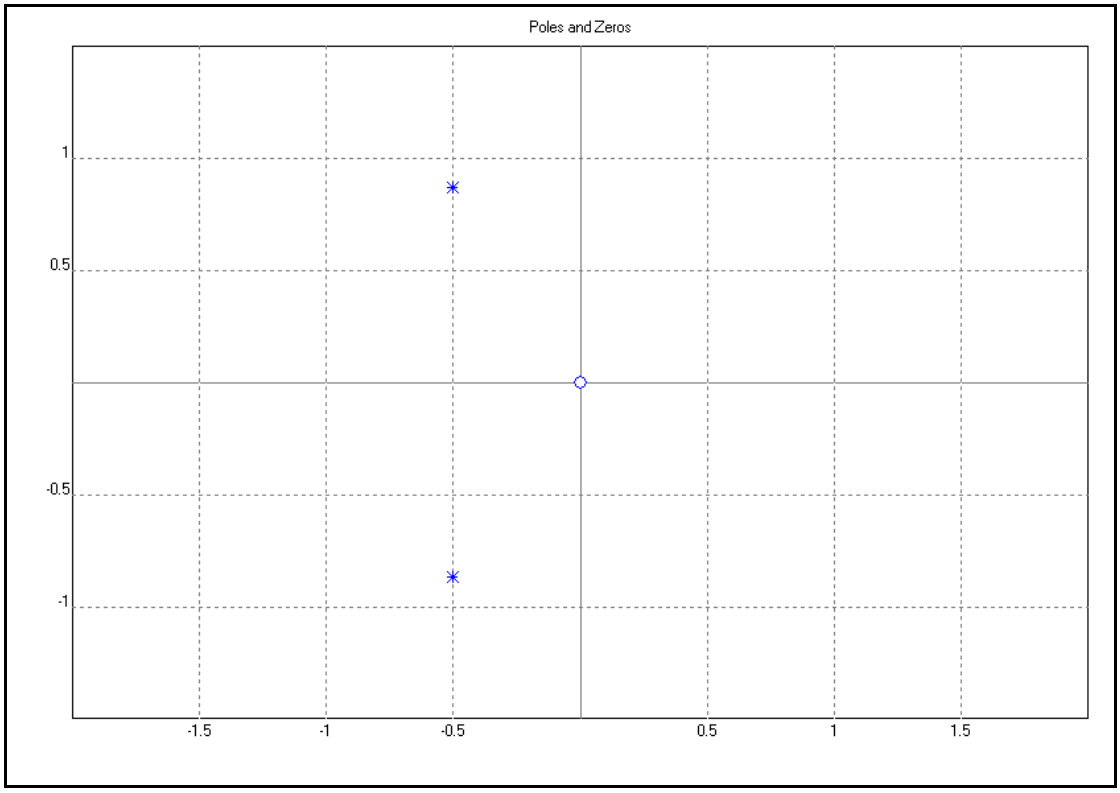

Figure 5: Pole zero plot of second order high pass filter

5. Software

If you are not confident or even comfortable with the idea of poles, zeroes, the roots of a function or the complex s-plane, you can (re)familiarise yourself with the principles by looking at notes for EEE101 "Circuits and Signals", EEE201 "Signals and Systems" and AMA242 "Mathematics III". Books, including Smith and Dorf [29] and Nilsson and Riedel [30] are also useful. It will be useful to study some circuits with a pen and paper. EEE103 and the first tutorial sheet in EEE204 should give you plenty of practice. Practically all text books come with examples and solutions so there should be no shortage of problems to try. SPICE [31-44], Sapwin [45], Matlab and Maple provide excellent methods for checking your understanding.

5.1. SAPWIN

Sapwin is a program written by the University of Florence. It analytically solves LTI circuits such as filters and linearised amplifiers. It provides a pole zero plot, gain, phase, step and impulse response, the transfer function, and more besides. The pole zero plots presented here have been generated with it.

Sapwin is analytical and is therefore as accurate as the circuit diagram supplied. There is one caveat to its use: having spent some time trying to make it give an analytic answer for a three stage feedback amplifier, it stubbornly refuses to provide a pole zero plot. This is hardly surprising, the circuit in question is 7th order (with simplifications). The program appears not to be able to produce a partial fraction expansion of a transfer function. This is dissapointing because it would permit a meaningful numerical continuation of analysis when the symbolic route becomes impractical.

5.2. SPICE

SPICE can produce pole zero plots [46-47]. However, it can get stuck in a loop on more complex circuits (more than one or two transistors) and produce many, many poles and zeros. It can also find the same pole or zero several times, while missing some others. I regard the pole zero function in SPICE with considerable suspicion and I am not alone. My preferred SPICE is LTSPICE. It doesn't include a pole zero function because its author, thinks it too poor to be useful [48]. While we are on the subject of LTSpice, if you use it then join the Yahoo! users group [49]. It's very informative and you get direct access to the program's creator. Not even Cadence (maker of Orcad) can boast that.

5.3. Maple

Maple is a powerful symbolic mathematics tool. It is often compared to Matlab (which is a more widely known powerful numerical mathematics tool). However Maple and Matlab are fundamentally different, and should be treated so. A very good example of how Maple's power can be exerted in electronic feedback circuit problems is given in a transimpedance amplifier example published by Waterloo Maple [50]. Maple is a product of Waterloo Maple, a Canadian Company; it is available to UoS students for the princely sum of £2 from CICS. The learning curve for Maple is quite steep. That is to say, you need to know quite a few things about it before you can generate sensible results. On the other hand, if you take the time it is very, very powerful.

5.4. Matlab

Matlab is more expensive. Matlab has a symbolic math 'toolbox' which is essentially a copy of Maple running in the Matlab environment. I find it somewhat cumbersome to use as the output is ASCII only. Maple's stand alone software produces considerably more elegant output. Matlab has a gentle learning curve compared to other products such as Maple, which may account for its popularity and widespread use as a numerical tool in industry and academia. When it comes to number crunching and plotting data, Matlab should, in my opinion, be your first choice. When you have a problem that needs to be solved analytically Maple is the correct choice.

Sometimes you would like to have an analytic answer so that you can see the effect of a certain variable (for example a resistor value or a transistor β) on a particular specification (such as gain, output noise, upper -3dB frequency etc). Having obtained the analytic answer you may want to plot several graphs where the parameter of interest is swept over a set of values and the results plotted on, for example, a Bode plot. I have found that Matlab is superior for the graph plotting. Maple can produce an expression as a text string in Matlab code which is easily cut and pasted into a Matlab script or M-file. Maple has a highly developed plotting system of its own which is entirely acceptable, but I'm fond of the way Matlab graphs look.

5.5. Others

There are other numerical and symbolic mathematics programs including:

- WxMaxima
- Octave
- Mathematica
- Mathcad.

WxMaxima is a clone of Macsyma and is released under GPL. Linux and Windows versions are available. Octave is a program which is similar to Matlab and is also released under GPL. It too is available for Windows as well as Linux. Mathematica and Mathcad are both proprietary software products.

6. The Bode Plot from a Feedback Perspective

This section discusses a method that can be used to assess stability in analogue electronic circuits, and control systems.

6.1. The Bode Plot

A Bode plot is a graph of gain and phase against frequency of a system or a circuit that has the properties of linearity and time invariance (LTI). The systems need not have feedback. If a feedback system is under investigation a Bode plot can yield important information regarding the stability of the system.

Any complex quantity can be plotted on a Bode plot including, impedance, current, voltage and power. It is the open loop response $G(j\omega)H(j\omega)$ that is useful on a Bode plot when considering stability of feedback systems. Figure 10 and Figure 11 shows an example Bode plot. I have drawn on Figure 11 to illustrate some points.

$G(j\omega)H(j\omega)$ will not necessarily be unit-less, although if the amplifier takes its input as a voltage and delivers its output as a voltage also, then the loop gain is usually expressed in dBV, decibels with respect to 1 Volt. If the amplifier's input is a current and its output a voltage then $G(j\omega)$ will have units of Volts per Ampere (V/A) which is sometimes written as Ω or dBΩ if it is in decibels. I prefer not to use Ω, it is not very descriptive of the physical situation. $H(j\omega)$ will have units that depend on how the feedback is 'derived' and 'applied' in the system, see Grey [18].

An example LTI system is a car suspension and damping system. When you drive over a pothole (of which there are many in Sheffield) you experience a fair approximation to its impulse response.

A loudspeaker driver in a closed box is a third order LTI system. Considerable advances in the design of loudspeaker enclosures were made by A. N. Thiele and R. Small in the 1960s and 1970s respectively [51-58]. The principles which they developed are now the basis for many software programs used in the design of loudspeaker enclosures.

Incidentally, the fellow who came up with the idea of phasor notation of a complex quantity was a mathematician called Charles Steinmetz (1865 - 1923) [59-60]. Try to imagine what life as an electronic engineer would be like if only the rectangular form was available.

6.2. Feedback System - Open Loop Analysis

The trick with the Bode plot is that, assuming you can plot the open loop gain of your system, you can see at a glance if it is stable or unstable. The rule is:

"If the gain is greater than unity when the open loop phase shift reaches 180° then the amplifier may oscillate"

The 'may' requires some clarification; it is there to cover conditional stability. Ideally an amplifier should have a bounded output whenever the input is bounded. Such systems go under the control acronym BIBO. In some situations a system can be stable for some inputs, but not others. This is conditional stability, and it is to be avoided in amplifiers. There are particular arrangements of open loop poles and zeros that represent conditional stability, but they are not relevant to this material.

Conditional stability can sometimes be resolved into absolute stability by increasing the open loop gain[2].

6.2.1. Gain Margin

The gain margin is the value of the *open loop* gain, $|V_{out}/V_{in}|$, when the *open loop* phase shift of V_{out} with respect to V_{in} reaches 180°. If the open loop gain at 180° is -12dB then the gain margin is said to be 12dB. If you end up with a negative gain margin, your amplifier may oscillate.

6.2.2. Phase Margin

The phase margin is a measure of the *open loop* phase shift of the output voltage with respect to the input voltage when the *open loop* gain reaches 0dB. If the open loop phase shift is -155° when the gain is 0dB then the phase margin is given by 180 – 155 = 25°. Generally speaking it is considered good practice to have a phase margin greater than 45°, 60° being preferable.

6.2.3. Finding the poles and zeros of a system from a Bode plot

When using a Bode plot, it is possible to tell the number of poles and zeroes you've passed looking from low frequencies to high frequencies by observing the rate of change of the magnitude plot and the magnitude of the phase shift. A 20dB/decade slope is representative of one pole or one zero and will be accompanied by a maximum of 90° phase shift. 40dB/decade is indicative of two poles and will be accompanied by a maximum of 180° phase shift. Poles and zeroes cancel each other out. If you pass two poles and one zero the final slope of the magnitude plot will tend towards -20dB/decade as frequency increases. If you pass two zeros and one pole +20db/decade should be expected.

You can also tell what quadrant the phase shift will be in (0° to 90°, 90° to 180° etc.) by the slope of the magnitude plot. If the magnitude plot is decreasing towards the 0dB point at 40dB/decade, the phase shift is approaching 180° and that stability might be "a bit iffy". If the magnitude plot is decreasing towards the 0dB point at 60dB/decade the phase shift is between 180° and 270°. The amplifier will probably oscillate.

In real systems it is possible to get values between the usual 20, 40, 60 dB/decade, depending on where the poles are with respect to the frequency you're looking at. The standard values are sometimes called 'asymptotic values'. An experienced designer will be able to have a fair guess at the phase margin just by looking at the magnitude plot.

The problem of plotting the open loop response for a Lin style feedback amplifier is considered in section 13.

---

2 This is another example of how feedback can perplex. Increasing open loop gain, in the right circumstances, can *improve* stability! A full explanation of this is in Bishop and Dorf [1], and in the paper by and Nyquist [25].

6.3. Closed Loop

The closed loop Bode plot can be used to assess several circuit parameters including small signal gain, frequency response and the placement of the closed loop poles and zeros.

It is not generally[3] possible to infer anything about amplifier stability from the close loop response.

In many amplifiers the closed loop gain will be higher than the open loop gain at some frequencies, this is counter intuitive. The premise of negative feedback is that the designer sacrifices some open loop gain to obtain lower distortion, higher input impedance, lower output impedance and lower sensitivity of the circuit specifications to variation of its component values [18]. Having more closed loop gain that open loop gain seems like getting something for nothing. In fact the extension of the closed loop gain beyond that of the open loop gain is another effect of negative feedback[4]. This effect is sometimes employed in wide band amplifier design.

The movement of poles should not be surprising. After all the open loop response is given by

$$\frac{V_{out}(j\omega)}{V_{in}(j\omega)} = G(j\omega)H(j\omega)$$

so the open loop poles are the roots of G(jω)H(jω). The closed loop response is given by

$$\frac{V_{out}(j\omega)}{V_{in}(j\omega)} = \frac{G(j\omega)}{1+G(j\omega)H(j\omega)}$$

Some transposition will be required to get the transfer function of the close loop gain into a form where the poles and zeros can be identified. The last step is often a factorisation or partial fraction expansion so that each pole or pair of conjugate poles forms part of the partial fraction[5]. This allows the roots of the denominator polynomial to be seen at a glance.

Looking at the two equations above, it is easy to see that it must be possible to link the open loop and closed loop behaviour. G(jω) and H(jω) are transfer functions, both possessing some poles and zeros, and that G(jω)H(jω) features in both equations. This was not lost on the early researchers, and is the idea which underpins many of the analogue methods designers used in control system stability analysis (for example, the root locus method).

---

[3] See Grey et al. [15] pages 630 - 632 for a relationship between closed loop gain peaking and open loop phase margin which applies in a specific set of circumstances.

[4] The fact that feedback has so many apparently unrelated effects on circuit performance may go some way to explaining why some people (almost exclusively in audio circles) are disdainful of it. In fact it is arguably one of the most powerful tools available to design engineers. Of course like many good things you have to know how to use it properly, and when it's use will be beneficial or create difficulties.

[5] In MATLAB The command required is 'residue'. Residue has special requirements on its parameters. You will have to read the help files. In MAPLE 'convert(label,s,parfrac);'. Where label is the label assigned to the transfer function of the system. If you follow the symbolic route MAPLE should be your first choice.

6.4. Bode Plot example of the link between closed and open loop response

We can see this linking in action by carefully selecting an example. I have used SPICE to drive the feedback network of a simple three stage amplifier with a perfect voltage source. This source represents the amplifiers output. The magnitude and phase response at the point where the differential pair transistor's base would be connected is plotted.

The feedback network is a pole zero circuit with a low pass characteristic and a finite stop band attenuation. The stop band attenuation determines the closed loop gain of the amplifier in the mid band. The gain of the amplifier is given by the familiar non-inverting opamp equation (1+R2/R1). R1 = 1kΩ, R2 = 12kΩ, C1 = 470µF. There should be one pole and one zero at around 8mHz and 350mHz respectively. See Figure 6 to Figure 8.

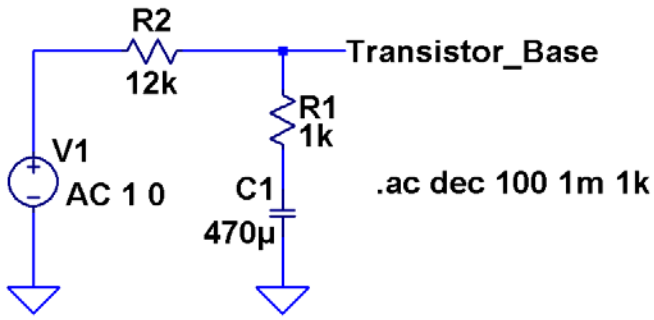

Figure 6: Simple feedback network of Lin style amplifier

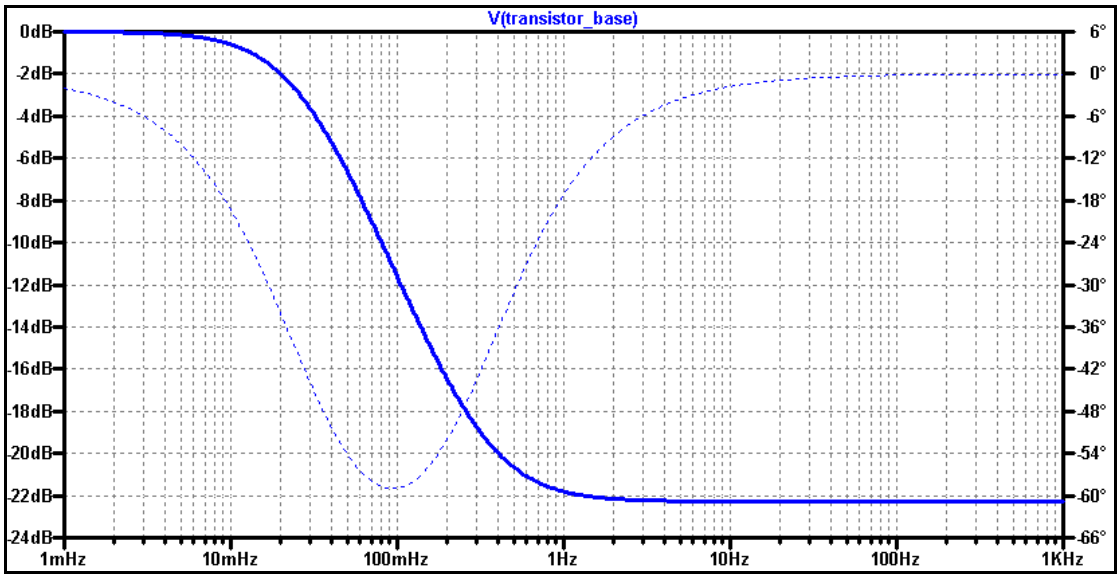

Figure 7: Simple feedback network driven by voltage source

Consider the gain in this region in the closed loop response for the whole amplifier (Figure 8). The circuit diagram for the closed loop amplifier containing this feedback network is shown in Figure 9.

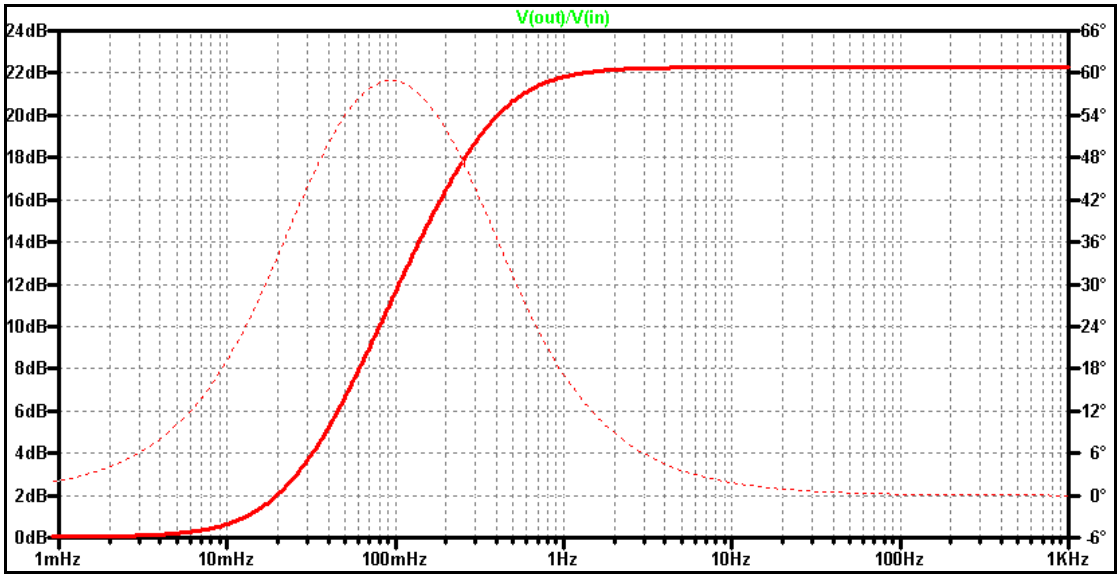

Figure 8: Closed Loop response of simple Lin Amplifier

Notice that the pole has become a zero, and the zero a pole this is because H(jω) appears in the denominator of the closed loop transfer function. This is a somewhat simplified view, and generally speaking you should not always expect the poles of the closed loop response to occur in exactly the same location as the zeroes of the feedback network. It depends on several factors including how well the amplifier approximates a unilateral feedback system. I have purposely chosen the feedback network for this example because the frequencies of interest are low, the time constants are well defined by circuit components not parasitic elements and because the feedback network is linear.

There are some control system methods that try to show what will happen to the closed loop poles as a function of the open loop system parameters. The 'root locus' method uses a polar plot. It draws the path (locus) travelled by the closed loop poles on their adventure across the s-plane as one system parameter is changed. The parameter is usually the open loop gain.

The movement of the closed loop poles as a function of the open loop gain is such that the closed loop poles move, from the position of the open loop poles, to the position of the open loop zeroes as open loop gain is increased [1]. If you think about the generalised feedback equation this should not be surprising. You might like to try inserting some simple functions into the general feedback equation. You can then follow the poles and zeroes around the equation as you manipulate it into a standard form to prove that the above is true. It will be easier to do this in Maple, although it is possible by hand.

A good treatment of the root locus method in the context of feedback amplifiers is given in Chapter 9 of Grey [18]. Chapters 8 and 9 of Grey are essential reading when considering feedback in amplifiers. The root locus method from a control perspective is given in Bishop and Dorf [1].

7. 'How to Read a Bode Plot' - SPICE Simulation of a Simple Amplifier

The point of this section is to simulate an amplifier of sufficient simplicity that the poles and zeros of the open loop response will be evident from the Bode plot. This section does not necessarily provide a 'good' amplifier design. That said it's not 'bad' although it could be very significantly improved.

7.1. Circuit Diagram

The circuit diagram is taken from LTSpice so that it is clear exactly what has been simulated. Other programs such as Proteus [61] produce more pleasing schematics.

The supplies have no internal resistance. There are no parasitic elements associated with any passive components. Only the active devices have parasitic elements which are not explicitly shown on the diagram. These elements are computed by SPICE from the device models. The internal workings of SPICE in this respect are considered in section 11.

You will probably notice that the output stage is under biased and, if you simulate it, that the quiescent currents in Q6 and Q12 are quite different (approximately 30mA and 10mA respectively). This doesn't matter at all, we just need *an amplifier*. Unsurprisingly the output offset is not so great either. As long as all transistors are in their correct operating region and are at a bias point which we don't modify during the course of our discussion, the 'quality' of the amplifier is of little consequence.

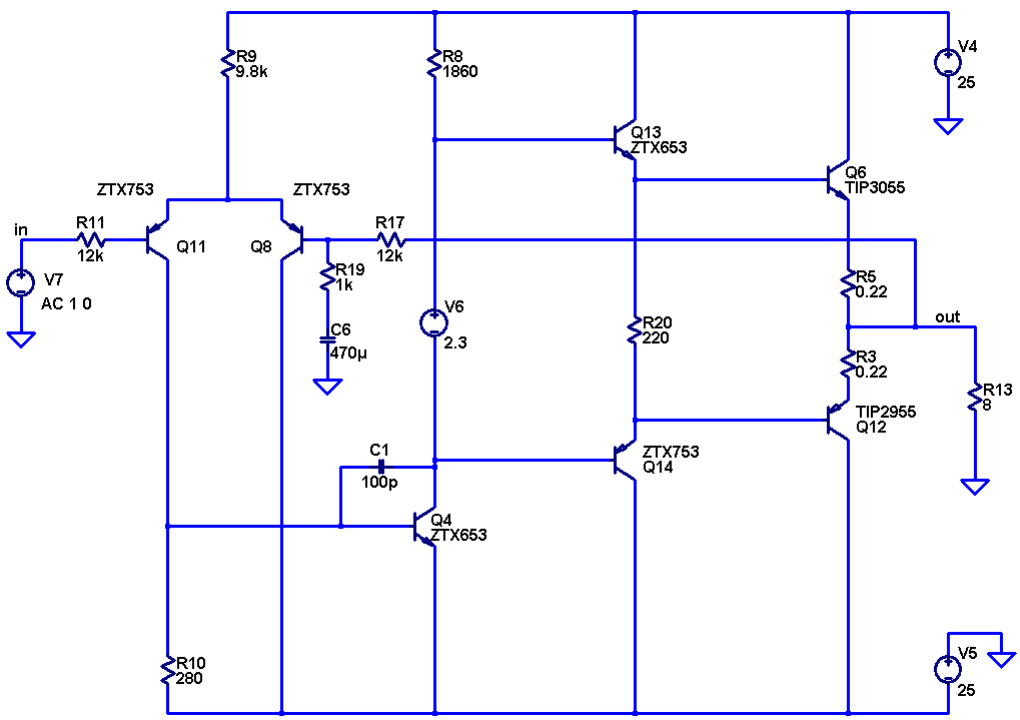

Figure 9: Circuit diagram for a simple amplifier

7.2. Open and Closed Loop Bode Plot

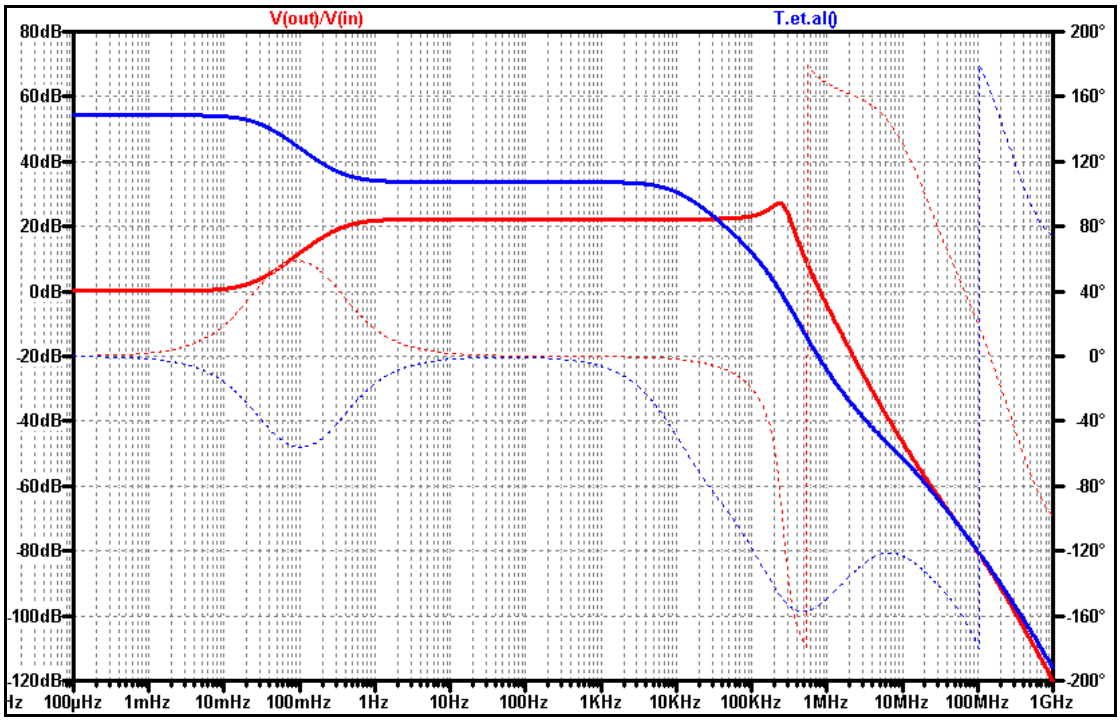

Figure 10: Open (Blue) and Closed (Red) Loop response of a simple amplifier.

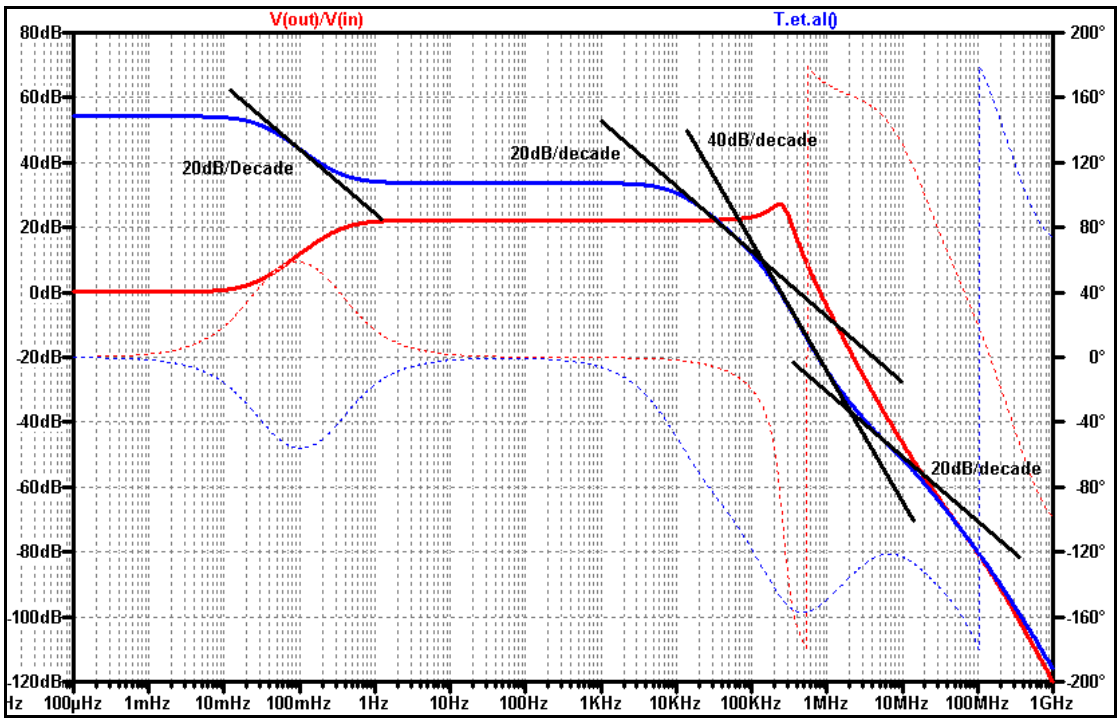

Figure 11: Open loop (Blue) and Closed loop (Red) Bode plots. The open loop plot has some asymptotic slope values marked.

7.3. Open Loop Poles and Zeros

In the figures, magnitude is a thick solid line and phase is a thin dashed line. The blue response in Figure 10 is the open loop response. There are four or five poles in the open loop response and two zeros. The first pole is at about 32mHz and is due to the feedback network, the second is at about 10kHz and is due to the miller capacitance.

The third is at about 164kHz and is due to the differential amplifier. The fourth is at 20MHz and is probably due to the output stage. A fifth may lay around 200MHz but there is not enough graph left to see what the final slope will be. Expect 60dB/decade if a fifth pole exists.

There is a zero at 332mHz due to the feedback network and another at 2MHz. The 2MHz one is interesting, it arises due to the collector base capacitance of the input transistor in the differential pair. Although it is modified by the collector base capacitance of the feedback differential pair transistor, and the voltage amplifier base emitter capacitance. Considerably more on this later. The phase margin is 33° which is very small, the gain margin is 80dB. Both are measured using the open loop (blue) line. It is considered good practice not to allow a phase margin of less than 45° with 60° considered more preferable, generally the higher the better.

If you have doubts as to what causes certain poles and zeros a quick, and usually quite effective, way to check is to modify the value of one of the components you believe to be responsible and see what happens. If you modify a value in such a way as to reduce the time constant and the pole goes up in frequency then you're probably on a winner. If it goes the other (wrong) way, you have had an effect but the facts are not yet clear.

7.4. Closed Loop Poles and Zeros

The closed loop response exhibits a zero at about 32mHz and a pole at about 332mHz two poles at about 250kHz. By the last decade of the plot the rate of decline of the magnitude is 40dB/decade. The response is very under damped. You can see that the closed loop gain *can* be bigger that the open loop gain. A resonant 'hump' will emerge if two closed loop poles are close together in a region of frequencies. A resonance in the closed loop transfer function is generally indicative of a low phase margin.

I did not measure the poles and zeros of the closed loop response very accurately as there is little to be gained by knowing their values. The point of inspecting the closed loop response is to check that the magnitude of gain is constant within the audio bandwidth (20Hz to 20kHz) and that the phase shift in this region is zero. More on this later.

7.4.1. Tailoring the Closed Loop Response

It is possible (in a simulator at least) to arrange your open loop poles such that your closed loop poles fall within particular criteria. For example an amplifier can be a critically damped system. This will yield the maximum bandwidth without peaking in the AC response. It will also provide the fastest small signal rise time without any overshoot. It is possible to arrange the poles and zeros such that an amplifier behaves like a first order system, and therefore have a phase margin of 90°. This is usually the objective when designing an opamp. It is impossible to manufacture a circuit which replicates exactly what the simulator shows, because your circuit is filled with parasitic elements that the simulator doesn't know about. SPICE is a parameter-based modelling system, so its answers are only as good as the parameters (models) you supply.

7.5. Large Signal Bandwidth

There is a limit to the large signal bandwidth of the amplifier, which is sometimes called the 'full power bandwidth' or similar. It is the maximum frequency at which

the rated power can be delivered to the load. This is a *large signal effect* related to the amplifier's slew rate. The limitation is usually set by the maximum dV/dt that can exist across the compensation capacitance. Assuming standard miller compensation, the slew rate is a function of the input stage quiescent current, the voltage amplifying stage quiescent current and the compensation capacitance (C1 in Figure 9).

7.6. Large Signal (Transient) Response

The closed loop damping can be investigated by looking at the closed loop small signal (.AC) frequency response and the transient (.TRAN) response to a suitable input; for example, a step response. In an under damped system, a resonance will be apparent in the closed loop AC response, probably in the low RF region. The step response of the closed loop amplifier will exhibit ringing. Equations that relate the damped ringing frequency to the un-damped natural frequency (ω_0) of a system are derived in control texts. The ringing does not normally impinge on the audio bandwidth.

Some sources will say that ultrasonic ringing degrades the quality of a sound system. If there were audible intermodulation products between the ultrasonic ringing and an audible signal, then I suppose that would be a plausible argument. Unfortunately this is almost never the argument pursued, especially by subjectivists. We will meet subjectivists shortly. The loudspeaker will probably filter the ultrasonic frequencies out. If it doesn't, because for example it is a piezo HF driver with flat frequency response to 40kHz, your brain/ear combination will filter it out very nicely. If you're not happy with that, then you can add a filter in your pre-amplifier to set the bandwidth of the power amplifier.

Most amplifiers have power bandwidth setting filters. They are necessary to protect the zobel network. The zobel is a capacitor and a resistor in series from the output to ground. A thorough engineer or technician might decide to perform a full power sine wave test at 200kHz into an 8Ω resistor. The impedance of the capacitor falls with frequency, and the capacitor will dissipate power because it is not perfect. If you are careless (as I have been in the past) it will be destroyed.

Sometimes ringing at the output with a step input is used to evidence 'poor stability' or 'low damping factor' or similar. This measurement technique requires some assumptions, it is popular because the measurement is supposedly 'easy', but practically everyone does it wrong. The simulated open loop gain and phase response are more worthy of scrutiny, as long as your simulation models are reasonable. The trick with the step response measurement is to remove the output inductor and damping resistor if one is present. A combination of the output inductor, loudspeaker, zobel network and impedance looking into the output transistors interact, and ringing results. Because the ringing is outside the feedback loop the feedback will not reduce it. This ringing has nothing to do with amplifier stability. If you do try this test make sure the 'scope probe is calibrated!

7.7. Small Signal Performance

The closed loop Bode plot is particularly useful for showing the magnitude of amplification that a small signal will experience, and also for showing the frequency dependence of the amplification. Ideally, the magnitude of amplification should be constant from 20Hz to 20kHz. The phase shift should be zero in this region.

Zero relative phase shift between two power amplifier outputs which receive the same input signal is important in multi amplifier public address (PA) situations. This is because the audible frequency range is normally split up into three or more signals. These signals are amplified by three or more different amplifiers, which each drive one or more separate speaker cabinets. This is called 'tri-amping'. The radiation pattern of the PA system, viewed as a whole, will change if each part of it produces sounds that are meant to be played together at slightly different times. This is the effect of differing relative phase shift.

Several software simulation packages, such as LEAP [62] and WinISD [63], exist for the simulation of loudspeakers and their enclosures, filter networks and amplifiers. A good example of a PA system is manufactured by NEXO [64]. If you go to the Sheffield Student's Union club nights, apart from (very probably) damaging your hearing, you will have observed firsthand the NEXO Alpha system. The Foundry uses ~23kW of amplification; the Octagon Centre uses ~33kW [65-66]. Subwoofers in home cinema and car audio systems commonly use an all pass filter with variable phase shift as a relative phase shift correcting system. An 'all stop filter' is an engineer's joke.

8. SPICE Simulation Example of an Amplifier after Self

Douglas Self, is an electronic engineer and author who has written some rather good books on audio circuit design [67-68]. He has written a fair few articles for Electronics world [69] too.

Electronics World is an electronics magazine of note. Since 2000 or so the magazine has gone downhill somewhat in my opinion. You can read and request back issues in the Western Bank library. If you are looking for a 'good' year for audio start with 1996.

Elector Electronics [70] is another publisher of articles, books and a magazine on electronics. They also sell amplifier kits and some electronic components.

In his "Audio Power Amplifier Design Handbook" [67] Self introduces the concept of an amplifier which is practically perfect from the point of view of the listener. He calls it "blameless". It is interesting to look at the open and closed loop response of his design.

8.1. Blameless Circuit Diagram

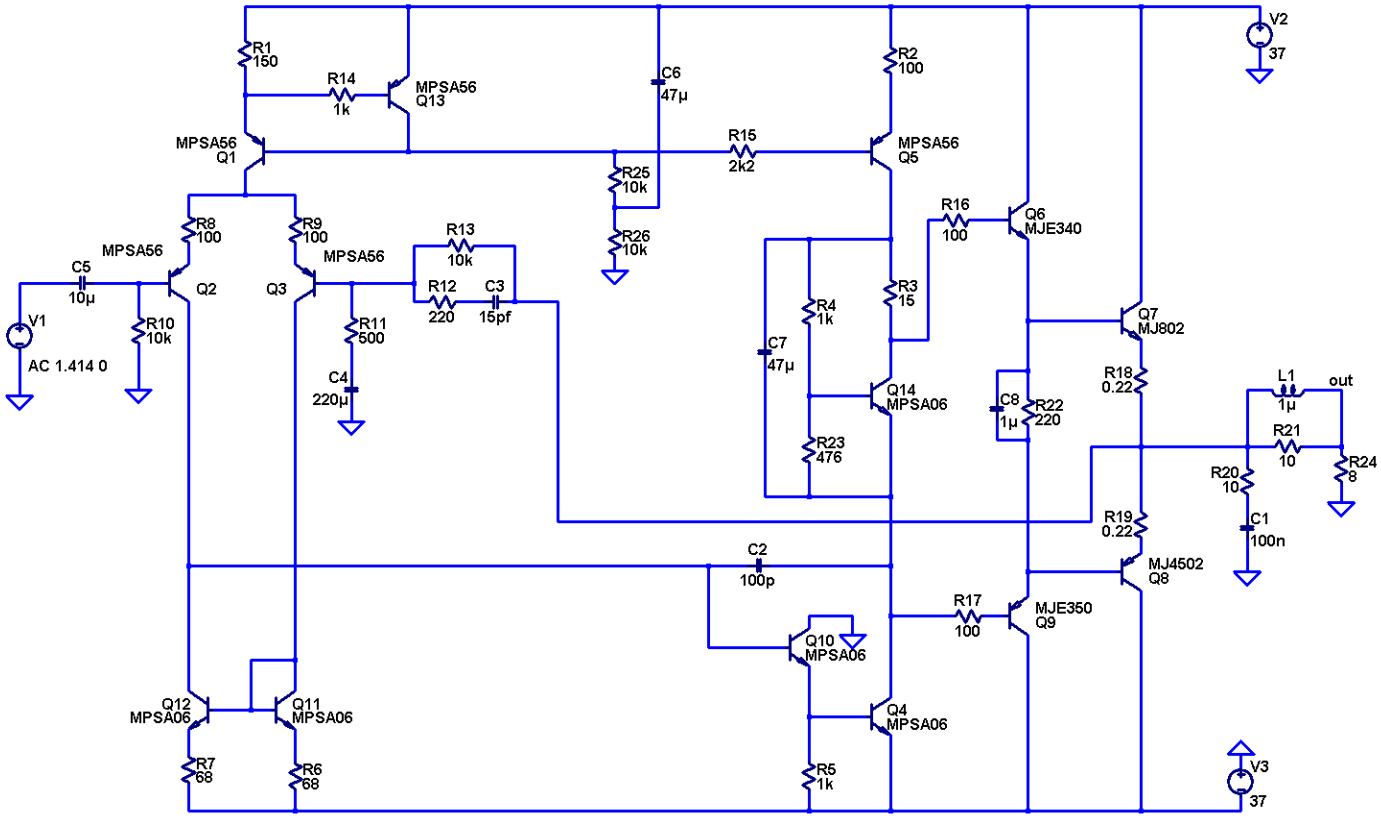

Figure 12: Blameless Power Amplifier after Self

8.2. Circuit Description

While the amplifier looks complex it is in fact quite simple. Breaking a circuit into its functional blocks is always a good way to tackle a larger circuit.

Q1 and Q13 act as a current source for the differential amplifier which is composed of Q2 and Q3. R8 and R9 degenerate the differential amplifier (reduce its gain by local feedback). C5 and R10 are an input filter. R10 also deals with the base to ground impedance of the input transistor of the differential pair. R11, C4, R12, C3, and R13 form the feedback network. Q12 and Q11 are a degenerated (because of R7 and R6) current mirror. In this case the degeneration acts to minimise differences in the V_{BE} of the two transistors for a given collector current. R25 and R26 are biasing for the current sources. Q5 is a current source (set by R2). Q14, R4, C7, R23 and R3 are a biasing network for the output stage (see Self [67] or Hawksford [71]). C2 is the miller compensation capacitance. Q10 and Q4 are a common emitter Darlington voltage amplifier. Q6 and Q9 are drivers for the output stage. C8 allows swift charge removal from either output transistor base by the opposite driver. It is sometimes called a 'speedup' cap, see Self [67] for details. Q7 and Q8 are the output stage. R18 and R19 are the emitter resistors. R20 and C1 are a Zobel network L1 is the output inductor and R21 is its damping resistor.

8.3. Bode Plot

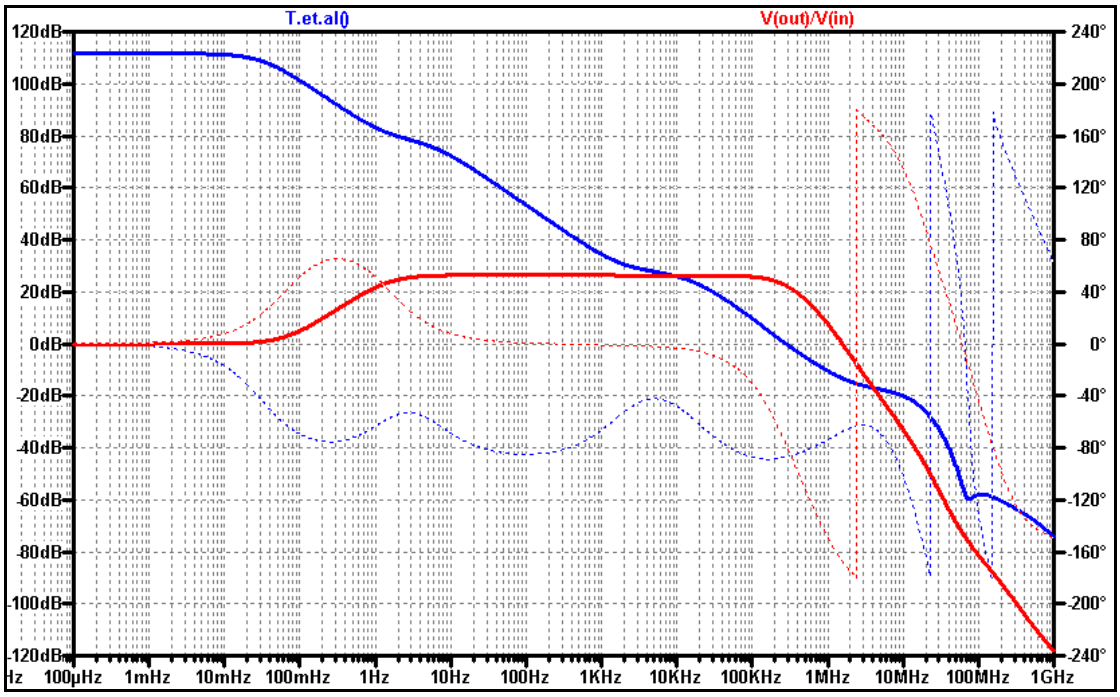

Figure 13: Example Bode plot of the "Blameless" Audio Power Amplifier's Closed Loop (Red) and Open Loop (Blue) Frequency Response

8.4. Discussion

The "Blameless" amplifier exhibits the open loop (blue) response shown in Figure 13. Look carefully at the open loop phase shift. There are three real[6] poles and three zeroes roughly equally spaced across the 100mHz to 10MHz frequency range. There are several poles at about 10MHz – 15MHz. We will think about where some of them come from shortly. This arrangement of poles and zeros results in a good approximation to a first order open loop response. The open loop gain is reduced by 20dB/decade and the phase shift is never more than 90° up to approximately 10MHz. This spacing of poles and zeroes is how operational amplifiers are given their first order characteristics. This response was designed rather than obtained by luck.

Self achieves a phase margin of about 94° and a gain margin of 28dB. This amplifier is rather over damped, it is first order after all, but that is not important. The loss in bandwidth due to the heavy damping does not impinge on the audio range.

Practically speaking the closed loop response of this amplifier is just as useful as the simple amplifier given earlier. It is not necessary to tailor the closed loop gain and phase to any particular shape outside of the constraints previously outlined. The simple amplifier does, however, have a very small phase margin. It's rather uncertain whether a physical realisation of that circuit would actually perform as an amplifier or an oscillator. The simple amplifier is inferior in (probably) every other figure of merit compared to the blameless amplifier.

8.5. Feedback Network

The feedback network that Self has chosen is shown in Figure 14. In this figure the feedback network is driven by a voltage source which represents the output of the amplifier. A SPICE AC simulation is shown in Figure 15.

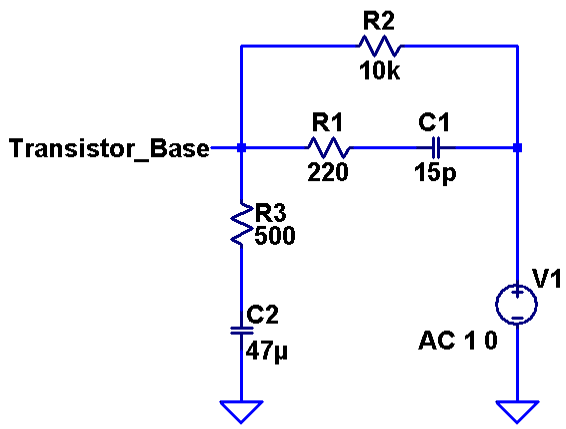

Figure 14: A more complex feedback network

[6] First order poles are real, second order are conjugate pairs of complex poles.

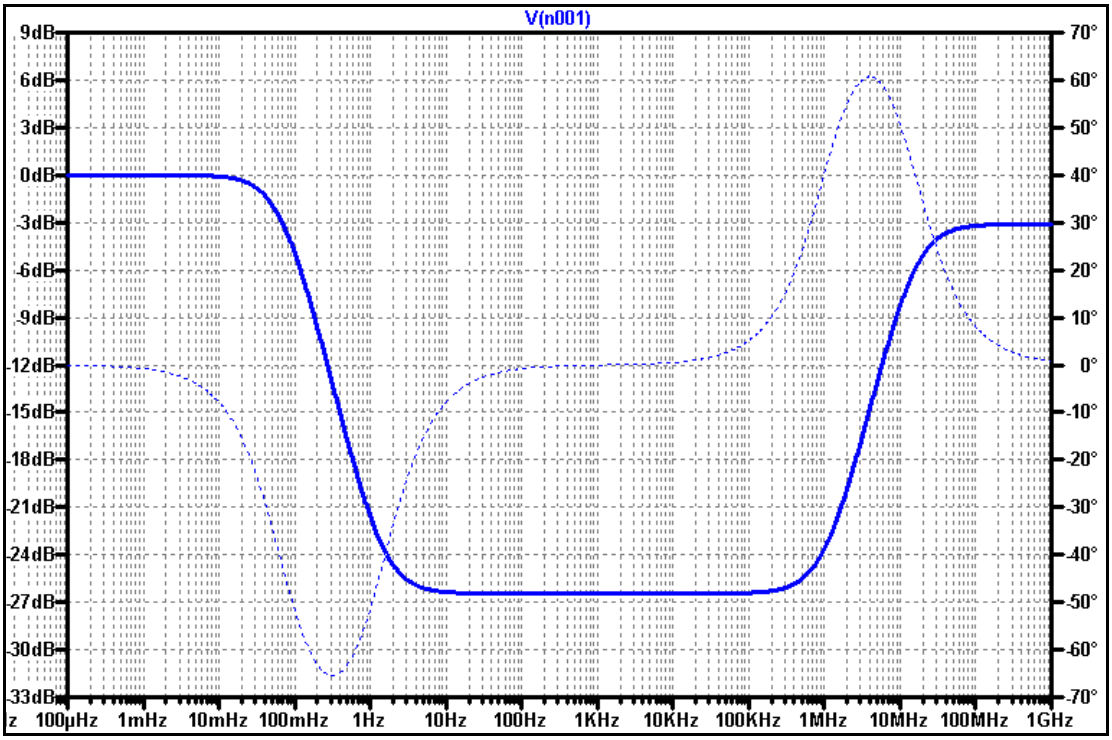

Figure 15: Bode plot of the feedback network used by Self

At low frequencies this network behaves similarly to the first order pole zero network, because the 15pF capacitance appears open circuit. As frequency increases from around 100kHz to 100MHz however the loss of the network is reduced. Remember that this is the response of the feedback network H(jω). The reduction of loss results in increasing the feedback factor and *reducing* the closed loop gain of the amplifier. Importantly this network also adds phase lead at high frequencies because of the *pole* at about 12MHz. This is very helpful because the 1MHz to 10MHz frequency range is where the phase shifts start to add up in these circuits, and it is the place where the open loop gain is approaching unity. If you can hold off the phase shifts associated with the accumulation of poles for another half decade or more then you are sure of a big phase margin. The use of phase lead in the feedback network a contributing factor towards the first order response.

I have called this feedback network 'second order pole zero' because it has two real poles and two real zeros and therefore has s^2 in both numerator and denominator. There is no chance of resonance in this network because the poles are not a conjugate pair. The network is, however, second order because the order of the polynomial in the denominator is two. A second conclusion must follow, namely that not all second order circuits are capable of resonance. Another example of a second order network that is incapable of resonance is a cascade of two low pass RC filter networks. This has two real poles and no zeros.

8.6. Other Poles and Zeros

Another factor contributing to the first order nature of this amplifier is that the zero at 1.5kHz and the pole at about 15kHz are carefully positioned. The zero at 1.5kHz is caused by the interaction of the DC biasing resistors of the input stage and the input base emitter capacitances of the differential pair transistors. If you simulate this amplifier you will only need to change the value of one of the resistors to say 10.2kΩ to see the zero move appreciably. It is easier to change the input side resistor (R10) as

modifying the 10kΩ in the feedback pathway changes other poles and zeros too, which might cloud the picture a little.

The 15kHz pole is placed by the degeneration of the input stage. I must confess though, I guessed that the input stage was the cause, and to find out I removed the degeneration (R8 and R9). As expected, the pole at 15kHz moves *up* in frequency. It was a guess based on experience. I realise that this last statement will be met with something between ridicule and outrage. To mitigate this, as far as is possible, my reasoning is set out below.

Generally speaking you would never try to linearise (reduce distortion in) a single stage which is inside a multistage feedback loop by locally degenerating it. If you take gain away from one stage, the loop gain (which is the product of all the stage gains in the loop) falls proportionally. This is undesirable because you want the multistage (global) feedback to linearise all the stages as much as possible. Reduction of distortion is one of the good things about feedback, there must have been a reason why Self (who we must assume knows about the correct way to used feedback) degenerated that stage locally. The logical conclusion is that he did to place an open loop pole.

Consider the 'simple amplifier' from earlier with standard first order pole zero feedback. If one forward path pole lays well within the region where open loop gain is greater than unity, and another lays at the unity gain point, the first pole will contribute 90° phase shift and the second will contribute 45°. Hence the phase margin will be about 45°. There is no possibility of phase lead in the simple amplifier feedback network, so if you have two poles in or near to the unity gain point you can't have ~90° phase shift. Self achieves a phase margin of 95° by adding phase lead to the feedback signal between the output stage and the differential pair feedback input. He achieves an approximately first order drop in open loop gain with frequency by carefully choosing the position of the input stage pole, the voltage amplifier pole, the feedback network low frequency pole and zero. The high frequency feedback pole and zero were probably chosen after a couple of simulation runs to counter the output stage pole(s) having observed them without the phase lead action of the feedback network.

9. Asides

This is a section that deals with things that I think are worth mentioning because they illustrate an area of audio or electronic design of audio amplifiers that is not covered in the other sections.

9.1. Operational Amplifiers

Professionals and graduate students will most likely be aware that there are two flavours of operational amplifier 'voltage feedback' (VF) and 'current feedback' (CF). If this is not familiar then a brief introduction follows.

Current feedback opamps don't usually get a look in at undergraduate level. Current feedback simply means that the signal appearing at the subtraction node having travelled through the feedback pathway is a current (as opposed to a voltage). Hence the subtraction node will not have much AC swing on it, it is a low impedance node. There are some good things about CF opamps including their lack of a gain bandwidth product – closed loop gain and bandwidth are not strongly dependant on each other as they are in VF opamps. See Mancini and Carter [72] for a very good run down on VF and CF opamps. Mancini and Carter also has a concise but excellent section on stability in operational amplifiers, it is well worth reading.

It may not be obvious unless you have looked at some opamp designs, but audio power amplifiers are usually just simplified opamps on steroids. We can take may hints from analogue IC design in discrete circuits, but not all things are equal. On a chip it is very easy to make two transistors with nearly identical characteristics, including strays. This is hard to manage with discrete devices, but sometimes it's necessary. If you open up a late 70's Tektronix oscilloscope you'll find lots of TO92 packaged transistors in pairs with their flat sides facing each other and a sprung steal or copper clip holding them together. The point of this is to keep the pairs at the same temperature and therefore maintain, as nearly as possible, identical operating conditions. This is often referred to as 'isothermal matching' or similar In these situations it is also usual to test many transistors using curve tracer and match their output or transfer characteristics as closely as possible before using them in a circuit.

It is possible to make an audio power amplifier with a current feedback topology, some examples exist on the internet [73] and in publications [74-75].

9.2. Absolute Phase and friends

Absolute phase is an audio term that pops up now and then, but is meaningless. I discuss it as an example of many such terms and ideas that constitute what Self calls 'misinformation' [67]. Misinformation is the stuff that is swilling around, the internet, marketing departments and other nasty places that really doesn't mean anything or has no or very few facts to support it. Alternatively the facts are sometimes misrepresented in order to make an incorrect argument. Beware the misinformation!

People can't hear 'absolute phase'. This is not surprising, as phase in the electronic sense is a *relative* measure between two waveforms. The idea of 'absolute phase' in my opinion is meaningless.

If you want to do some experimenting with this, get some headphones and blindfold yourself. Have a friend play a sine wave to one ear and a cosine wave to the other.

The amplitudes and frequency should be the same. Then have your friend mess up which ear gets which signal. Try to work out which ear is getting which.

Even better do 2000 trials with perhaps 100 people. For half of the people, don't change the ears around, but get them to do the experiment in the same way as those that do have changes, this is your control group. If the results, after suitable analysis, are statistically significant, I'll eat my hat, gloves, scarf, coat and amplifier! This experiment is essentially a randomised control trial (although for brevity I have not described a scientifically rigorous example). Ben Goldacre has an excellent book on this sort of testing methodology when applied to Medicine [76]. It makes very interesting reading.

'Absolute phase' also rears its ugly head in mixing console design/use. This is somewhat disappointing. For example, if you are recording a snare drum you will, if you have any pretentions to being a decent recording technician, use two microphones. The first will point downwards at the batter head (the one the drummer hits). The second will point upwards at the snare head. When the drummer hits the batter head it moves away from the top microphone and so does the snare head. From the point of view of the second microphone, both heads are moving towards it. The mechanical arrangement causes a phase inversion of the second channel *with respect to the first*. When you mix the two channels they will act to cancel each other out, leaving a very nasty sound. It is important to invert the phase of one of the channels *with respect to the other*.

For some reason it is common to hear absolute phase used in this sense, but there is no absolute phase involved. There are relative phase shifts only. The mixing desk will have the same (zero we hope) phase shift for all channels with respect to all other channels unless you press the invert button on a particular channel. Each channel has its own invert button. If the invert button is pressed the inverted channels will have 180° phase shift with respect to the 'normal' channels. No absolute phase, anywhere!

Regardless of common sense, 'absolute phase' turns up in marketing documents and less scientifically rigorous periodicals such as Hi Fi News [77].

9.3. Subjectivism

Hi-Fi News is the magazine where a movement in audio engineering called "subjectivism" started. Subjectivism is a thorny topic and there is not sufficient space to go into it properly here. See Chapter 1 of Self [68] for a rational, objective view.

The most extreme subjectivists like to think that some people who have "golden ears" can hear imperfections in audio equipment which are as yet undetectable to any scientific instrument, this is of course rubbish. Subjectivists like to use adjectives to describe the things they *think* they can hear in music when it is played through a particular amplifier, CD player etc. A list of nearly one hundred of these adjectives can be found in Ben Duncan's book [78]. I treat Duncan with caution, the circuits are good, and the facts are there, the history is interesting, but our opinion differs considerably on certain fundamental principles engineering design.

If we were talking about a microwave power amplifier that would be used in say a GSM cell network, it would be impossible for subjectivism to exist. This is why there are no microwave subjectivists that I know of. I wonder how many electronics

enthusiasts[7] who subscribe to the subjectivist line of thinking have studied electronics to degree level. If you want to comment *with authority* on the subjectivists argument you really need to have a strong academic background, by 'strong academic background' I mean PhD + 10 years research experience at a reputable academic institution, in "psychoacoustics and neuroscience" or something similar. I suspect that there are even fewer subjectivists who fulfil this criteria.

An example of a subjective review of some equipment is given on the Hi-Fi Collective website [79]. Notice the complete lack of measurement or any statements which can be checked using test equipment. Refer to Duncan [78] to find out the meaning of the words this reviewer uses. The Hi-Fi collective website does not appear to be affiliated with the reviewer, but they do sell volume potentiometers that cost more than £200 each, so you can decide for yourself the kind of 'audiophiles' they cater for.

9.4. Car Audio and Loudspeaker Systems

A car is generally a poor environment for listening to music. Enormous low frequency drivers with hundreds or thousands of watts are not desirable. All it does is deafen you, cause a mechanical resonance that rattles your parcel shelf about, and makes the rest of the world think, 'that guy is an idiot'. One of the problems is that cars are a funny shape and they are made, proportionally to a room, with quite a lot of glass (by surface area c.f. a normal domestic listening room). Glass reflects sound waves quite well. Subjectivists might describe the effect of the reflections as 'muddy' (or any other adjective, apparently).

The majority of loudspeaker drivers that are installed into car subwoofer systems are specifically designed with automotive applications in mind. The effect of the small listening area is to modify the resonant frequency of the driver. This is usually taken into account, along with some other factors, by the loudspeaker designer.

Some car systems are designed to use the back windshield in a hatchback as a reflector. The loudspeaker drivers are placed in a cabinet which is positioned in the boot. The cabinet often fills the boot; the practicality of this is, for some reason, consistently overlooked. The loudspeakers face upwards towards the back windshield, the idea being that the bass will be reflected through 90° towards the driver. Much is often made of the relative phase shift of certain frequencies with respect to other frequencies at the position of the drivers head.

While the amplifier should not add any phase shift at all audible frequencies loudspeaker systems cannot avoid adding some phase shift. Much is also made of the transient response of a loudspeaker system and 'group delay' also pops up occasionally. Group delay is the first derivative of phase shift, constant group delay is often considered desirable. This implies that a speaker system which has a linear phase shift with respect to frequency is desirable. In analogue systems obtaining a linear phase shift with frequency is very hard, in a digital system it is simple. Lots of digital signal generators make use of this property of digital filters. When used in frequency generation the system that makes use of linear phase digital building blocks is often called 'Direct Digital Synthesis'. Some loudspeaker manufacturers have

[7] I cannot bring myself to call them 'designers'

claimed linear phase shift for their loudspeaker products including, for example the Technics SB-F2 speaker system [80]. In fact the phase shift is *nearly* linear.

Car audio has to run from the alternator voltage, which is 13.8V or so in a modern car. This means that unusual systems are required to generate a signal that will dissipate 500W in 8Ω. Consider that 63V RMS would be required but only a 0V to 13.8V rail is available. Some clever solutions are used, but there is a bit of brute force as well. Some car audio speakers are 2Ω devices. Driving a low impedance increases distortion. Not that this will matter with the parcel shelf dancing around.

If you are interested in car audio the internet is filled with ideas [81], some good, others not so. Scientific studies are examined in the Journal of the Audio Engineering Society (AES). The 36th AES Conference on Automotive Audio was held in Michigan, USA in June 2009. There was a feature in the JAES on the state of car audio in November 2009 [82].

10. MATLAB Simulation of an Amplifier (LTI system)

In the first half of this document, I have shown that you can use a Bode plot to look at the open loop gain and phase characteristics of a feedback amplifier. You can, with a little thought, work out which circuit blocks are responsible for at least the first half dozen poles and zeros. All of this has been done in SPICE.

In order to show that an LTI representation of a feedback amplifier is possible I will use Matlab and the Control Systems Toolbox to show that the Bode plot of the open loop gain really can give you the poles and zeros and that the closed loop behaviour can be modelled by looking at the open loop behaviour.

In this section I will develop an equation for the open loop response of an amplifier. The general unilateral feedback equation will be applied to obtain an expression for the closed loop response. Comparisons with SPICE may then be drawn.

I have not taken great care to produce a perfect answer. This sort of analysis would not form part of an amplifier design method. It is, in engineering design terms, a blind alley. From an understanding feedback amplifiers perspective it is instructive.

10.1. LTI System Development Process

The process is simple, in this section I will:

- Introduce another amplifier circuit and describe it
- Give SPICE generated closed and open loop Bode plots, with the phase and gain margin
- Work out where the poles and zeros are from the open loop Bode plot, by observing the bode plots and remembering the rules (which were given earlier) about what happens when you pass poles and zeros.
- Present a MATLAB script to:
    - Produce the four transfer function equations and plot them on a Bode Plot:
        - Forward Path Transfer Function G(s).
        - Feedback Path Transfer Function H(s).
        - Open loop Gain G(s)H(s).
        - Closed Loop Gain.
- Draw Conclusions.

10.2. Circuit Diagram

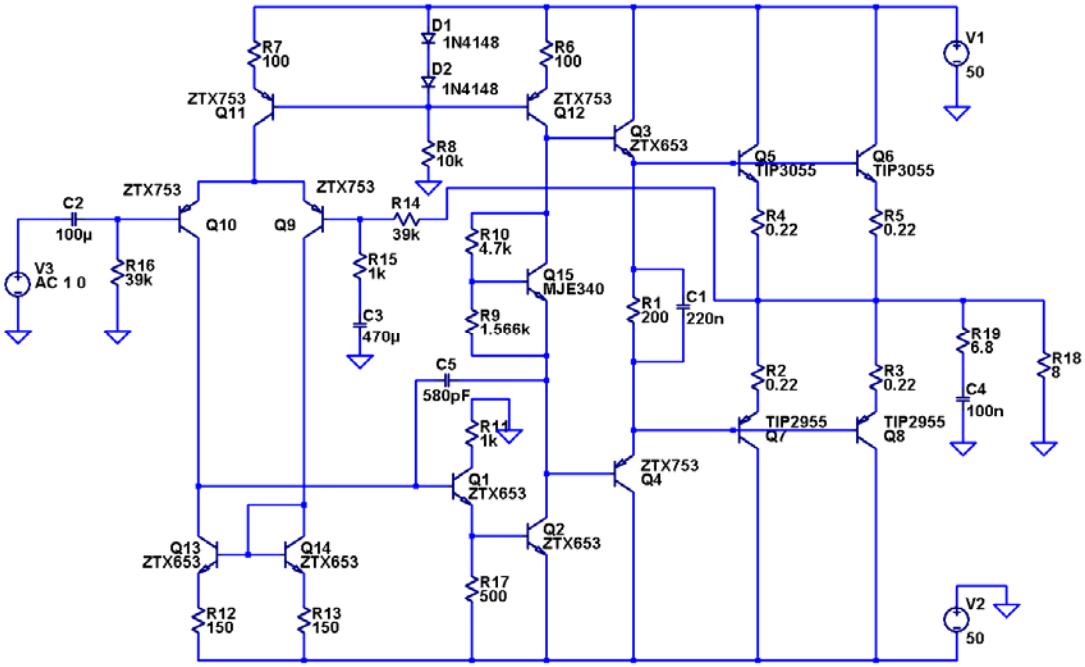

Figure 16: This is a simplified version of the Blue Ice Power Amplifier. Protection circuits have been removed for clarity.

10.3. Description

This amplifier is substantially similar to the amplifier after Self. This is hardly surprising. There are a finite number of arrangements of circuit blocks. There are compelling reasons for using current sources made from junction transistors. There are good reasons for using a degenerated current mirror. A Darlington is probably the best voltage amplifier on offer. Drivers are essential if you are using BJTs in the output stage. You might be beginning to think that these circuits design themselves. Superficially they do, but the inner workings are another matter.

There are a few things I'd do differently if I was designing this circuit now, but that is part of the proof of what I said in the introduction, we are all going to be learning all of our lives. For example the value of C5 is large in order to give a reasonable phase margin. This moves the dominant pole to a lower frequency, effectively reducing open loop gain in the audio bandwidth. Hence the amplifier does not reduce its distortion as much as it would if the dominant pole was higher in frequency. If the value of C5 was a more suitable 100pF then two closed loop poles would fall very close together. The phase margin would be about 25°. Ideally I would resolve this by degenerating the input stage to move the offending closed loop pole to a lower frequency. And thereby have a smaller miller capacitance and maintain my 50° phase margin. This would relieve the necessity for high quiescent currents which are required to drive C5. The circuit would be cooler and less noisy. Or the slew rate could be 'better' although it is capable of 20kHz at full voltage swing anyway so this is not really an advantage, just an improvement in specification. Assuming C5 is changed to 100pF the increase in open loop gain throughout the audio bandwidth would enhance the feedback factor and so reduce distortion.

Another approach would be to lower C5, consequently the signal stage quiescent collector currents could be lowered. As a result the small signal stage

transconductances would fall, and the closed loop poles would move around in some way, slew rate could be kept the same. It is not certain if this would make the situation better or worse as lowering C5 and lowering transconductance will act to move the closed loop poles in opposite directions. The effects may cancel out any movement in the poles. I could also fiddle with the zero caused by the DC bias resistors of the input stage so that it mitigates the resonance effect of two of the closed loop poles, the options are endless. This is where a simulator with some reliable models is a very attractive proposition.

In any case this amplifier is far from perfect there are certainly a few things I could have done differently. This is one of my guitar amps, the noise is not too bad. It's dominated by hum from the rectifier/guitar pickup. It does run warm, but it's not out of specification, it just works. The output offset is rather good, but I think that is luck in picking matched transistors in the current mirror rather than well designed degeneration of the current mirror. I haven't bothered to check how effective the degeneration is, see Grey [18] for how you do the analysis. Alternatively I could just short out the resistors briefly and see what happens to the actual circuit.

10.4. SPICE Bode Plot

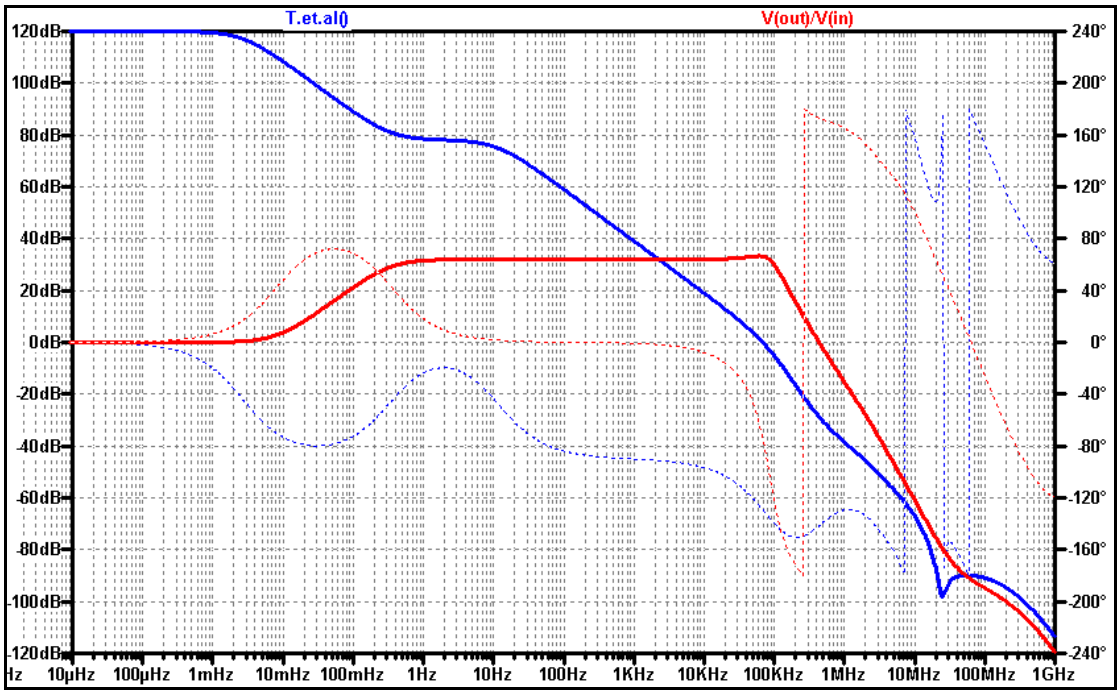

Figure 17: SPICE Bode Plot of MATLAB example amplifier (Blue) Open loop, (Red) Closed Loop

The phase margin is about 50° and the gain margin is 61dB. If I ran a marketing department I'd be quoting the gain margin. I hope that you are coming round to the idea that, in feedback amplifiers, the engineer who is 'on the ball' will ask about the phase margin first.

Gain margin is more useful when the open loop gain is a parameter of the system design and is precisely known and easily varied. This is usually the case in control systems problems. The reasoning goes that if you implement your system and find your gain margin is greater than you designed for, you can assess how much you can increase the open loop gain by and still meet your design criteria for overshoot,

settling time etc. This assumes open loop gain is a parameter that you would like to maximise, which is often the case.

10.5. MATLAB 'Simulation'

I hope that by this point you are convinced (if you were not already) that we really can tell which parts of the circuit, at least in terms of the functional blocks like differential amplifier, voltage amplifier etc. are causing which poles and zeros in the open loop response just by looking at the Bode plot and thinking about some time constants. If not you will be by the end of the document.

I have written a script for Matlab (an m-file, to use their terminology). It accepts the locations of poles and zeros in the forward path G(s) and the feedback path H(s). It also requires the low frequency forward path gain. This is the product of the transconductance gain of the input stage and the transimpedance gain of the voltage amplifying stage. You can take it as being the low frequency value of the open loop gain from SPICE. Although it is possible to work it out with a pen and paper to an 'order of magnitude' accuracy.

When looking at the bode plot of the open loop response I found it was not possible to reduce the H(s) network to a frequency independent unity term (to make a buffer) without affecting the G(s) network. As a result if you intend to treat G(s)H(s) as two functions it is necessary to account for the effect of H(s) on G(s) and estimate the position of the G(s) poles based on (more accurate) knowledge of H(s). This generally only affects the miller compensation pole. I suspect that the majority of the inaccuracy of this simulation arises due to this inconvenience.

10.5.1. Script Description

This script requires the control systems toolbox. It has been tested with on Matlab 7 SP1 – student version, with the control systems toolbox.

The idea is to represent the forward path and feedback path as the product of a set of poles and zeros. In this case I have elected to use three real poles and one real zero for the forward path and a single pole and zero for the feedback path. The Laplace operator 's' is a symbolic type which has the properties of a complex number. Read the help for the control systems toolbox if you want to know about it. For the purpose of this document assume that the 's' in my script has all of the properties you would associate with 's' = jω if you were solving a second order filter or similar. The frequency independent gain is 'ao'. The notation for poles and zeros is as follows:

- f/r - forward or reverse
- p/z - pole or zero
- # - an integer starting from 1 which uniquely identifiers each pole/zero within the current set.

All that remains is to compute the various components of the transfer function and plot them.

10.5.2. Script

```
clear all;
% make 's' a symbolic type that possess the necessary properties of the
% Laplace operator.
s = tf('s');
% Set up a range of frequencies to plot across
```

```
w = logspace(-3,10,1300);
% frequency independent loop gain G(s)H(s)
ao = 1.22e6;
% forward path G(s) pole locations rads/second
fp1 = 63.14;
fp2 = 564.41e3;
fp3 = 39.76e6;
% forward path zero locations rads/second
fz1 = 1.382e6;
% feedback path zero locations rads/second
rz1 = 2.02;
% feedback path pole locations rads/second
rp1 = 0.05723;
% forward path transfer equation
G = ((ao)*(1+(s/fz1)))/(((1+(s/fp1)))*((1+(s/fp2)))*((1+(s/fp3))))
% feedback Path Transfer Equation
H = ((1 + s/rz1) / (1 + s/rp1))
% Open Loop Gain
E = G*H
% Closed Loop Gain
F = G/(1+E)
% Bode Plot G(s)
figure;
bode(G,w);
grid;
title('Forward Path - G(s) - Bode Plot');
% Bode Plot H(s)
figure;
bode(H,w);
grid;
title('Feedback Path - H(s) - Bode Plot');
% Bode Plot G(s)H(s)
figure;
bode(E,w);
grid;
title('(Open) Loop - G(s)H(s) - Bode Plot');
% Bode Plot 1/(1+G(s)H(s)
figure;
bode(F,w);
grid;
title('Closed Loop – 1/(1+G(s)H(s)) - Bode Plot');
```

10.5.3. Script Output

The standard output is four plots:

G(s) – Forward Path Bode Plot

H(s) – Feedback Path Bode Plot

G(s)H(s) – Open Loop Response

1/(1+G(s)H(s)) – Closed Loop Response

The script also prints the four transfer functions. Matlab produces ASCII, which I have re-written here in a maths package. Maple would produce a nicer equation but Matlab produces a nicer graph. It also tells you the gain and phase margin.

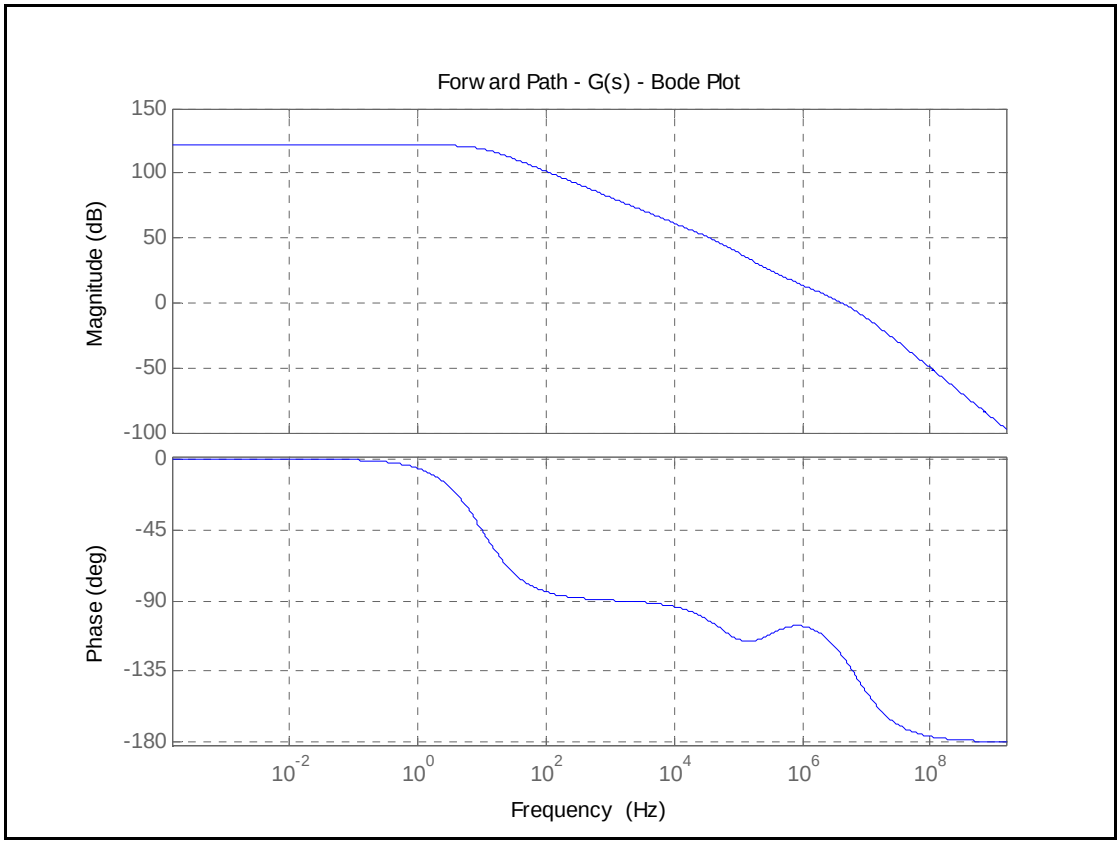

Figure 18: Forward Path G(s) Plot

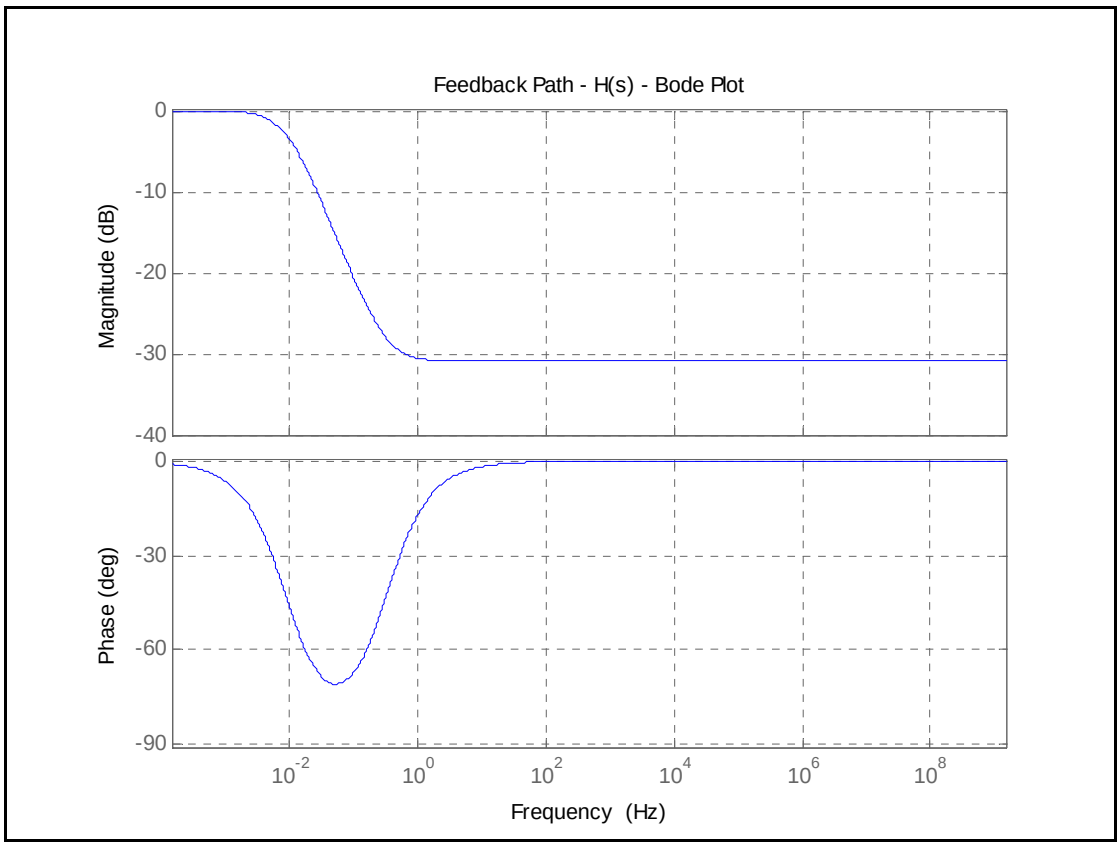

Figure 19: Feedback Path H(s) Plot

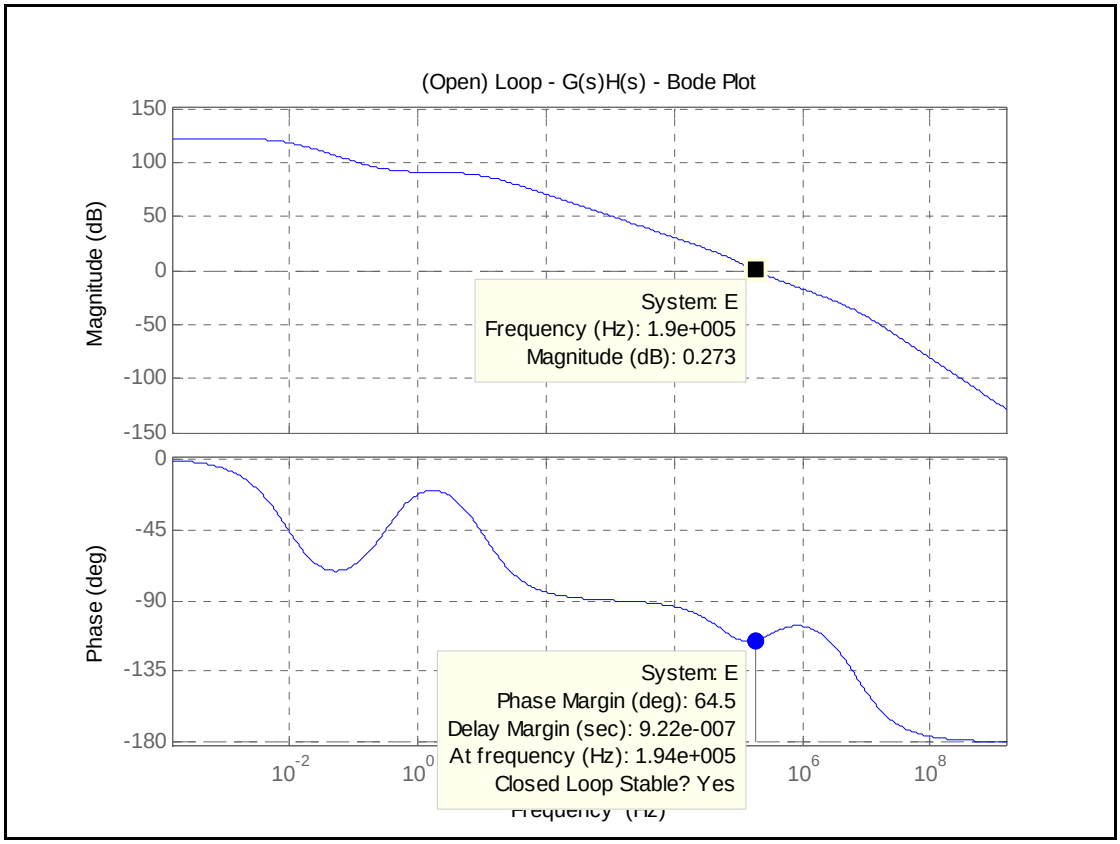

Figure 20: Open Loop Response

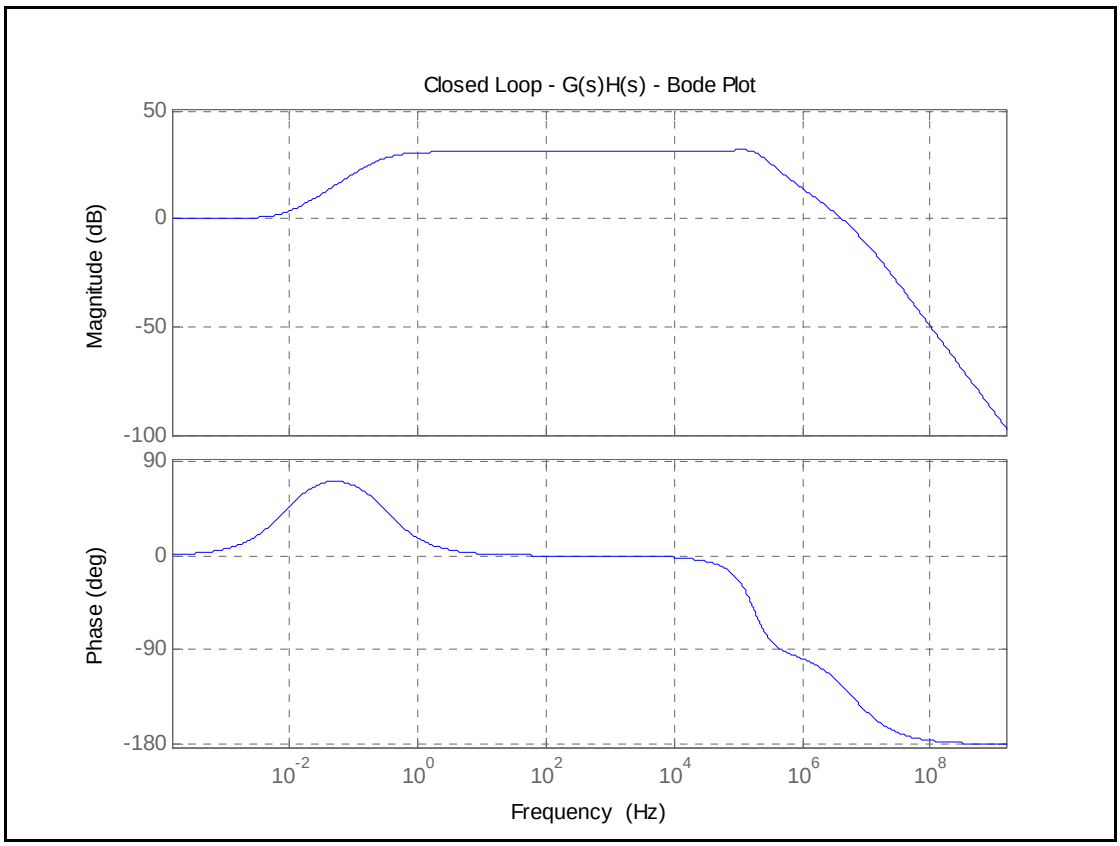

Figure 21: Closed Loop Response

G(s) Transfer function:

$$\frac{0.8828s + 1.22 \cdot 10^{6}}{7.058 \cdot 10^{-16} s^{3} + 2.846 \cdot 10^{-8} s^{2} + 0.01584s + 1}$$

H(s) Transfer function:

$$\frac{0.495s + 1}{17.47s + 1}$$

G(s)H(s) Transfer function:

$$\frac{0.437s^{2} + 6.04 \cdot 10^{5} s + 1.22 \cdot 10^{6}}{1.233 \cdot 10^{-14} s^{4} + 4.973 \cdot 10^{-7} s^{3} + 0.2768s^{2} + 17.49s + 1}$$

Closed Loop Transfer function:

$$\frac{1.089 \cdot 10^{-14} s^{5} + 4.54 \cdot 10^{-7} s^{4} + 0.851s^{3} + 3.377 \cdot 10^{5} s^{2} + 2.134 \cdot 10^{7} s + 1.22 \cdot 10^{6}}{8.703 \cdot 10^{-30} s^{7} + 7.019 \cdot 10^{-22} s^{6} + 1.485 \cdot 10^{-14} s^{5} + 2.862 \cdot 10^{-8} s^{4} + 0.0285s^{3} + 9568s^{2} + 6.233 \cdot 10^{5} s + 1.22 \cdot 10^{6}}$$

Looking at the equations for a moment, you will note that only H(s) is in a standard form. All the others either have a k which needs to be extracted or have something other than unity in the constant term. This is intentional it allows us to see where certain terms appear. For example the 17.47s in H(s) becomes almost all of the 17.49s in G(s)H(s). Unfortunately it is hard to see anything interesting in the last step from open loop to closed loop transfer function. Sometimes looking at equations is not very helpful, this is especially true as equations get bigger. Imagine how much bigger the equations would be if we used two or three more open loop poles. It is for this reason that engineering design has lots of rules of thumb and first order approximations.

10.6. Conclusion

Using only three poles in the forward path and one zero means that this LTI system will not oscillate under any circumstances. However we can still get a fair approximation to the phase margin of our much higher order amplifier. Compare the SPICE simulation given near to the beginning of this section with the MATLAB plots of Figure 20 and Figure 21. SPICE produces a phase margin of 52° Matlab a rather more adventurous 64°. In terms of the stability of the closed loop response this makes very little difference. If I were to continue perfecting the poles I've got, and added a couple more, I don't see why exact agreement should be out of the question.

The point of using Matlab was to show that there are poles and zeros in the places we believe from the Bode plot, and that this information is enough to define, with a reasonable degree or accuracy, what will happen when the feedback loop is closed. Making the equations bigger by adding poles and zeros will only ensure that the problem is less tractable. Furthermore as frequency increases the parasitic elements that are present in real circuits, but are not simulated by SPICE will produce considerable errors in a SPICE analysis, it is fruitless to continue perfecting a transfer equation for a system which cannot be realised with such accuracy. Sometimes in electronics you have to solve problems without too much mathematics. Many engineering problems require lots of mathematics, but it's worth remembering that mathematics is just a tool we use to model our observations.

11. SPICE Small Signal Simulation of the Simple Amplifier

So far we have seen that it is possible to determine where the poles and zeros are, and that you can, if you desire, work out the transfer function of an amplifier. The accuracy obtained is proportional to the time and effort applied. This information is not directly useful in design work, but having shown that it is possible is illustrative that both Bode plots and negative feedback work as I have described.

Up until this point, we have (mostly) discussed the pole locations in terms of the functional blocks that create them, for example "the pole at 15kHz comes from the input stage". It would be very useful to know exactly which components, in the circuit, parasitic or intended are responsible for their production. This will be useful because we will then be able to inform our design choices with some knowledge of the open loop response as opposed to the more common method which is to design the circuit and then worry about stability afterwards. The first half dozen poles and zeros (all the ones we've looked at so far) should be investigated. We will have to consider all parts of the circuit using small signal models. For this reason I will spend some time talking about the hybrid – π transistor model and the method by which SPICE performs .AC analysis.

11.1. Hybrid – π Model of a BJT

The hybrid – π model is a small signal model of a transistor. This means that it does not deal with whether the transistor is on or off or even the junction potentials. These are large signal effects because they modify the 'operating point'. The small signal model assumes that the operating point has previously been calculated and it is fixed. This means that the transistor is free from distortion and can source or sink any current or power to or from any load. The power supplies are not an issue and do not usually feature in small signal models. This is especially true if a single transistor stage is being considered. A simplified hybrid – π model is shown for a BJT in Figure 22. We will not need all parts of the model to get a reasonable answer to our problems. See Grey [18] for the full treatment or EEE331 "Analogue Electronics". Small signal parameters are in lower case. Large signal parameters are in upper case.

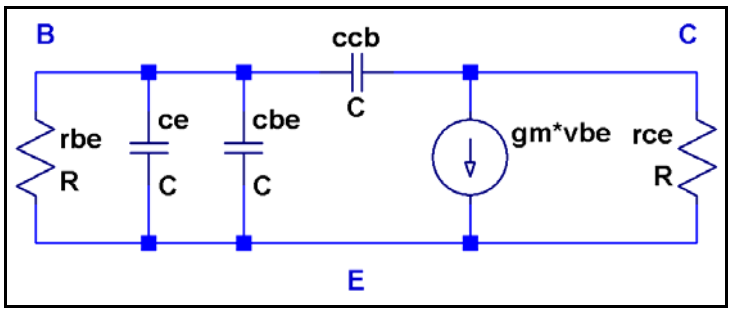

Figure 22 : Partial Hybrid π model

Model components:

- r_{be} – the dynamic resistance of the base emitter junction. r_{be} is related to transconductance (gm) by $r_{be} = \beta/gm$.
- c_e – the capacitance associated with the base emitter junction due to charge flowing across it.

- c_{be} – the capacitance associated with the base emitter junction due to the physical dimensions of the junction.
- c_{cb} - – the capacitance associated with the collector base junction due to the physical dimensions of the junction.
- gm – the transconductance of the BJT. gm = (q x I_C / k x T). where q is the electron charge, I_C is the quiescent collector current (a large signal parameter hence upper case), k is Boltzmann's constant and T is the absolute temperature in degrees Kelvin.
- r_{ce} is another dynamic (small signal) resistance, it is added to the model to give the output characteristics (a graph of I_C vs V_{CE} with varying V_{BE}) a slope. r_{ce} models the Early effect

Other model parameters include: base spreading resistance, emitter resistance, collector resistance and collector emitter capacitance.

Beta (β) is a very unstable parameter, between different transistors of the same type and across a few decades of collector current for any given transistor. Look at any datasheet for a graph of I_C against β. A bipolar transistor is sometimes *misrepresented* as a current controlled device. This is not very helpful, it certainly doesn't make for good design practice. A BJT is a voltage controlled device. I_C and V_{BE} are related closely across as many as 10 decades of collector current for any given device. The variation of gm with I_C between transistors of different types is practically nil. All Silicon BJTs at 300°K with 1mA quiescent collector current have a gm of approximately 38mA/V always and forever. The fact that a BJT sources or sinks current at its base is not a fundamental method of operation, it is simply a side effect of the BJT being reliant on minority and majority carriers for its operation. Hence its method of operation is "bipolar" compared to a MOSFET which only uses minority carriers in its channel and is therefore "unipolar". Base current is an effect of the BJT's method of operation not a cause. Low r_{be} often causes some annoyance. If you're not happy with how the BJT and MOS transistor work try Streetman and Banerjee [83] or EEE207 "Semiconductor Electronics and Devices".

11.2. How Does SPICE Deal With .AC

It is important to know how SPICE will approach our model of an amplifier when we have 'real' BJT models in it and when we replace those with our own small signal models. When a .AC is run the principle steps are:

- .OP is run. .OP is the SPICE command to find the DC operating point. It is equivalent to applying power to your circuit. Having no signal input connected, and measuring all of the branch currents and node voltages in the circuit with a multimeter.
- All of the active (non linear) devices (diodes, BJTs etc.) are replaced by their small signal equivalent circuits. BJTs are given values for gm, β, r_{be}, c_e, c_{cb}, c_{be}, r_{ce} etc. These values are calculated from the large signal voltages that exist on the device terminals (Base, Collector & Emitter) when no signal is input. This information is available from the .OP.
- The circuit has now been reduced to a set of independent sources, dependant (controlled) sources, resistors, capacitors and inductors. Consequently it can

be analysed by nodal analysis. SPICE uses a Modified Nodal Analysis which is easier to implement on a computer but contains an extra step [46].

- A matrix of coefficients for a set of Kirchhoff's current equations is developed and solved by one of several methods which can usually be selected in the simulator options.

11.3. Small Signal Circuit Diagram

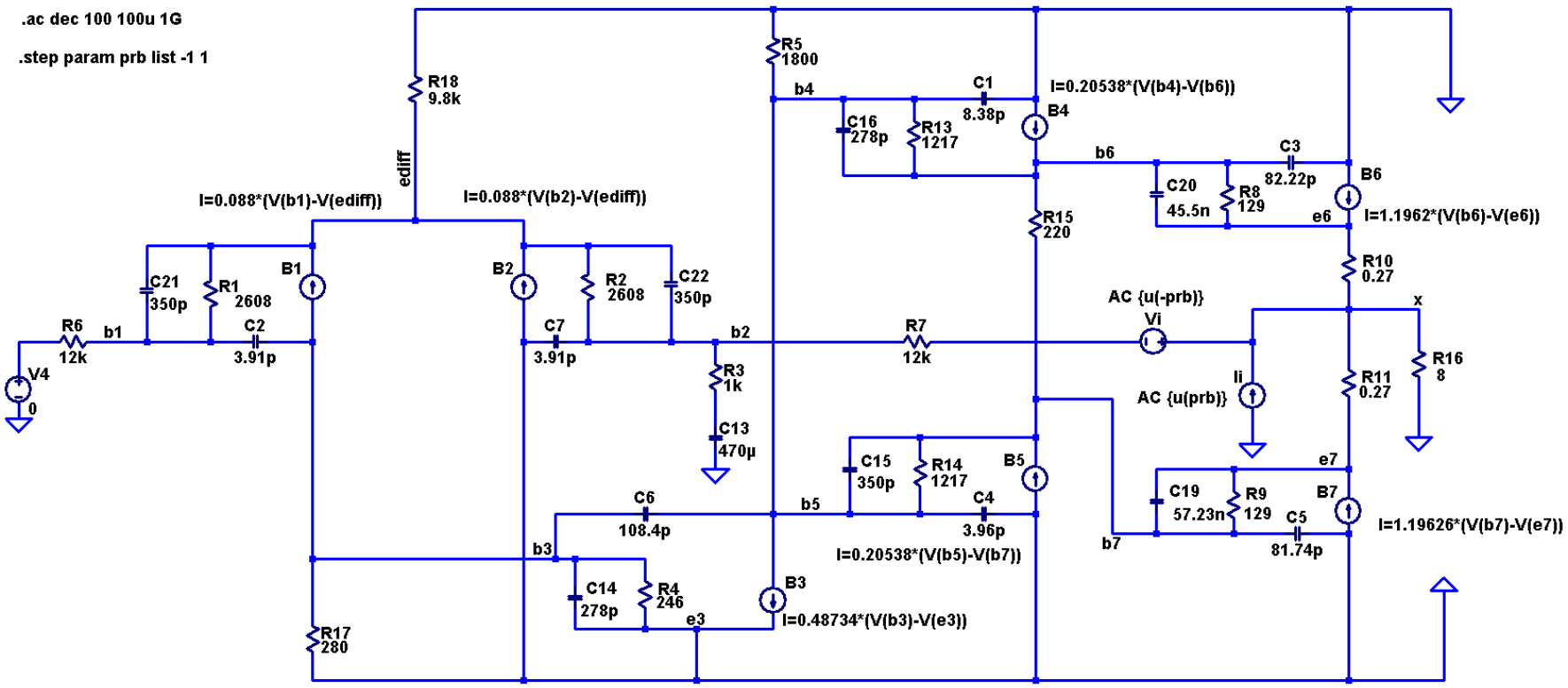

Figure 23: Small Signal Circuit Diagram of the Simple Amplifier

Our circuit is composed of the same passive components as the simple amplifier, all of the active components have been replaced with their small signal (linear) equivalent circuit in a similar way that SPICE linearises active components, but with simplifications. The values of gm, and r_{be} have been computed by hand assuming β = 250 for the small signal transistors and β=147 for the TIP3055 and β=139 for the TIP2955 power transistors. The values of the junction capacitances are obtained by using the same method that SPICE uses. It is possible to reduce this diagram further. We could rearrange the diagram and combine quite a few of the components. This would certainly be a good idea if we were working out the equations by hand. I have elected to keep the diagram looking, as far as is possible, like the circuit that it represents simply because it's easier to see what is going on. If you were to run .OP on this small signal circuit it would produce the wrong answer because it does not deal with large signal effects. This is of no consequence because when .AC is run, .OP is not required because there are no large signal models in the diagram to convert. We have done some of SPICE's work ourselves, and made a lot of simplifications along the way. Notice that the power supplies have gone and are replaced with ground. That is how the supply looks to a small (AC) signal. Notice also that the output stage biasing source has been removed. This is unnecessary because these transistors are linear, they are incapable of large signal distortion, for example crossover distortion and beta droop.

11.4. SPICE Models

Below is an example SPICE model. It is for the TIP3055. I can't remember where it came from but there is a good chance it was made by one of the large semiconductor manufacturers. Some of the terms are obvious, BF is clearly the forward β[8], EG is the band gap. We are not interested in all of them, but if you want a full workup on the modelling of semiconductors in SPICE, books and websites are available [47, 84]. If you give SPICE all of the parameters that it has room for then the transistor model that SPICE uses is the Gummel – Poon model [85-87]. If you neglect some of the parameters it will revert to the more familiar Ebers-Moll model.

```
.MODEL TIP3055 NPN IS=9.20807e-13 BF=147.096 NF=1.04318 VAF=378.469 IKF=10 ISE=6.09693e-09
NE=2.4688 BR=14.7096 NR=1.5 VAR=149.08 IKR=3.14824 ISC=1e-16 NC=1 RB=14.1904 IRB=0.1 RBM=0.1
RE=0.036413 RC=0.182065 XTB=0.1 XTI=3.71709 EG=1.05 CJE=7.39634e-08 VJE=0.531216 MJE=0.573868
TF=1e-08 XTF=1.35738 VTF=0.997148 ITF=0.99974 CJC=4.44315e-10 VJC=0.400241 MJC=0.410047
XCJC=0.803124 FC=0.653134 CJS=0 VJS=0.75 MJS=0.5 TR=1e-07 PTF=0 KF=0 AF=1
```

11.5. Calculating Small Signal Parameters by Hand

We need to find out what gm and r_{be} will be for each transistor. Each of the junction capacitances will need to be calculated at the operating point also. This section deals with these calculations.

11.5.1. Transconductance (gm) and base - emitter resistance (r_{be})

The equations we require are:

8 In fact it is the *maximum* forward β. β is a strong function of collector current, SPICE has equations to model the variation of β with I_C so we only need to provide the maximum value and other parameters to define how β varies with I_C. The parameters are collected together as a subset of the DC part of the Gummel-Poon model and are IS, BF, NF, ISE, IKF, and NE.

$$gm = \frac{q \cdot I_C}{k \cdot T}$$

$$r_{be} = \frac{\beta}{gm}$$

For the input pair 2.28mA flows in each collector therefore gm = 0.088 A/V. Assuming β = 250, r_{be} = 2.83kΩ. The value of β is taken from the SPICE model. The operating point value for I_C is found by running .OP on Figure 9.

Table 1: Transconductances and base - emitter resistances

Name	I_C [mA]	gm [A/V]	β	r_{be} [kΩ]
B1	2.28	0.088	250	2.38
B2	2.28	0.088	250	2.38
B3	12.7	0.491	250	0.51
B4	5.31	0.205	250	1.22
B5	5.14	0.199	250	1.26
B6	31	1.198	147	0.123
B7	10.7	0.414	136	0.328

Usually I would be worried about the imbalance of current in the output stage, but since we are concerned with the AC response of *an amplifier* at *an operating point*, as long as it amplifies the actual performance from a distortion, output offset etc. point of view is not significant.

It should also be noted that I have assumed β is constant. This is not actually so, as was mentioned earlier β is a rather variable parameter (look at any transistor datasheet). β is modified by the Early effect. Since I've not included an Early effect modelling resistor in my small signal model I have chosen to fix β at its maximum value. This is obtained by taking it from the SPICE model (BF).

On transistor data sheets you may note that the dependence of β on I_C is plotted and the Early effect is not mentioned, the Early effect is responsible for the change in I_C too. Semiconductor physicists are still searching for the Late effect. The Kirk effect does exist however. Fortunately it is something that transistor designers have to worry about and does not usually concern circuit designers. *"Enterprise, three to beam up."*

11.5.2. Junction & Diffusion Capacitances c_{cb} and c_{be}

The base emitter junction capacitance and the base emitter diffusion capacitance are lumped together as c_{be}. The equations we require for c_{cb} and c_{be} are:

$$c_{cb} = \frac{CJC}{\left(1 - \frac{VBC}{VJC}\right)^{MJC}}$$

$$c_{be} = \frac{CJE}{\left(1 - \frac{VBE}{VJE}\right)^{MJE}}$$

Note that junction capacitances in the Gummel - Poon model are dealt with in a substantially more complex way [87]. There are several other terms containing, among other things transit time effects. I have selected the dominant term. The currents are generally quite small so the capacitances arising from the device area will swamp the transit time effects. Because there is no base resistance (SPICE parameter RB) in our model the amount of the collector base capacitance which goes to the 'internal base node' (SPICE parameter XCJC) is everything so that has been removed too. Base spreading resistance is treated nicely in Massabrio and Antognetti [47].

Even with all the simplifications it should be possible to obtain a reasonable representation of our circuit behaviour. It will certainly be possible to tell which capacitances are responsible for certain poles and zeros.

CJE, VJE, MJE, CJC, VJC and MJC are taken from the SPICE Models. CJE and CJC are the zero bias junction capacitances. MJE and VJE are 'fitting parameters' that allow the model to fit characterisation experiments of actual devices. It should be evident that the model assumes that the relationship between the bias on the junction and junction capacitance is an inverse power law. If you consider that the depletion region will increase with reverse bias and that the capacitance is also proportional to junction area, this makes sense. VBE is the base emitter junction voltage at the operating point. VBC is the reverse bias base collector junction voltage. These are obtained from the circuit of Figure 9 by running .OP and noting down the required values by hand.

Table 2: Collector to Base Junction Capacitances

Device	CJC [pF]	VJC [V]	MJC	VBC [V]	c_{cb} [pF]
B1 (PNP)	80	0.4896	0.7676	-24.47	3.91
B2 (PNP)	80	0.4896	0.7676	-24.47	3.91
B3 (NPN)	45.5	0.5774	0.4534	-23.43	8.40
B4 (NPN)	45.5	0.5774	0.4534	-23.50	8.38
B5 (PNP)	80	0.4896	0.7676	-24.05	3.96
B6 (NPN)	444.315	0.400241	0.410047	-24.10	82.22
B7 (PNP)	444.708	0.400409	0.409494	-24.66	81.74

Table 3: Base to Emitter Lumped Diffusion and Junction Capacitances

Device	CJE [pF]	VJE [V]	MJE	VBE [mV]	c_{be} [pF]
B1 (PNP)	350	-	-	-	350
B2 (PNP)	350	-	-	-	350
B3 (NPN)	278	-	-	-	278
B4 (NPN)	278	-	-	-	278
B5 (PNP)	350	-	-	-	350
B6 (NPN)	73.9634 nF	0.531216	0.573868	-704.867	45.5 nF
B7 (PNP)	95.3946 nF	0.426507	0.675433	-482.168	57.23 nF

There are no values for VJE and MJE in my ZTX653 and ZTX753 SPICE models. Since I am neglecting transit time effects (and everything else), there is no bias dependence on this capacitance. This really cuts down the number of calculations!

All the values that are given in Figure 23 have now been computed. We can run .AC and look at an open loop Bode plot. Figure 24 is generated from the circuit of Figure 23. It is the open loop bode plot of the small signal representation that we have worked through by hand. Figure 25 is the analysis of the circuit in Figure 9.

11.6. Bode Plot

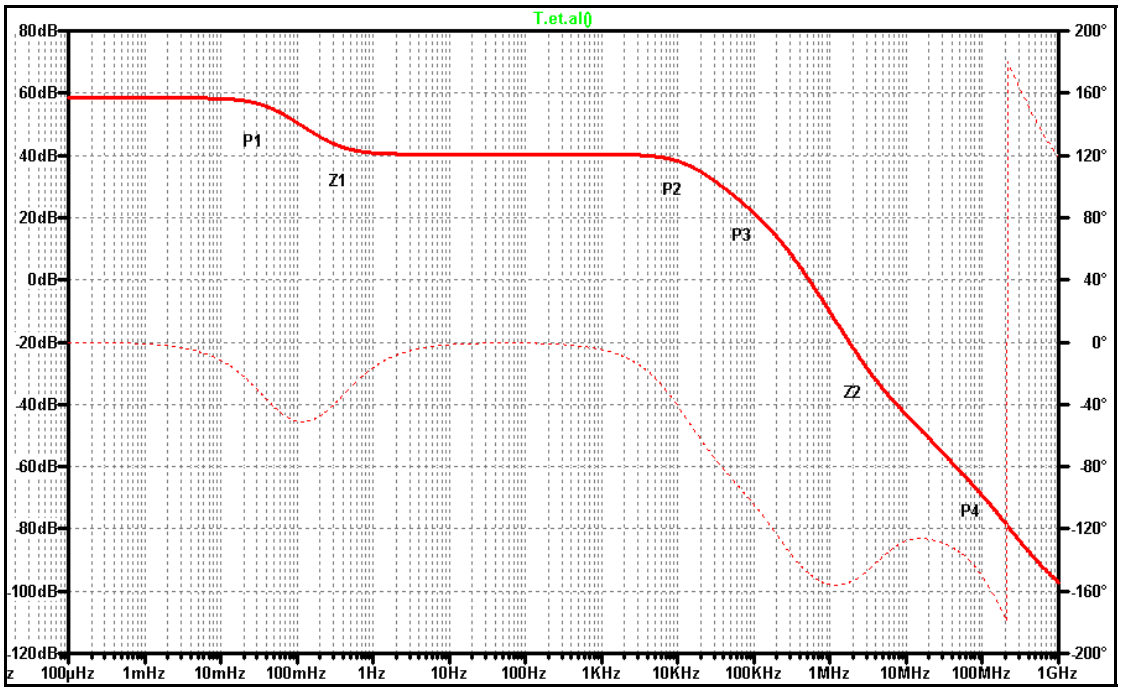

Figure 24: My 'Small Signal' Simulation Open Loop Bode Plot. Poles and zeroes are marked

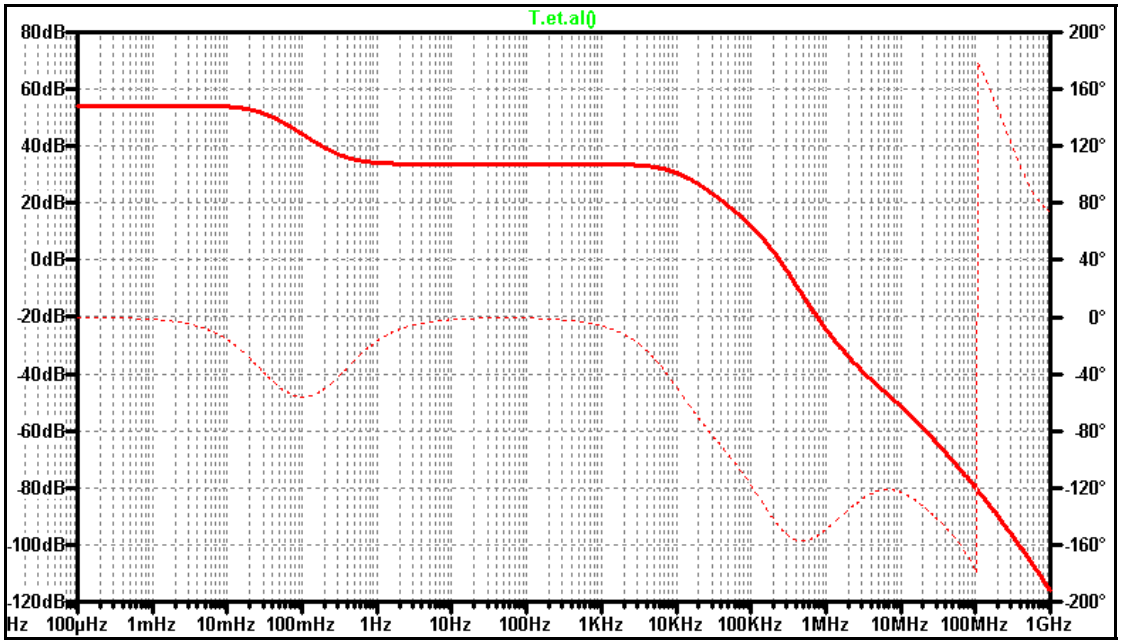

Figure 25: Standard Open Loop Bode Plot from the Circuit in Figure 9, generated using full SPICE transistor models

I hope you are surprised at how good a representation we can make with such simple models. The only major deficiency is that the open loop gain is 4.2dBV high in our small signal model compared to the 'proper' SPICE simulation. This is a factor 1.62 or so. It's tough to get the open loop gain magnitude right because you are multiplying the gain of the input stage by the gain of the VA stage. In the simplifications I neglected the variation in β with quiescent collector current. I expect this is the source of the error, although I haven't bothered to check. Despite this y-axis offset, it should be clear that we can know where all the poles and zeros come from. The method is simple, if you want to know the effect of a certain component you delete it and see what changes. The two open loop responses plotted on the same graph is shown in Figure 26.

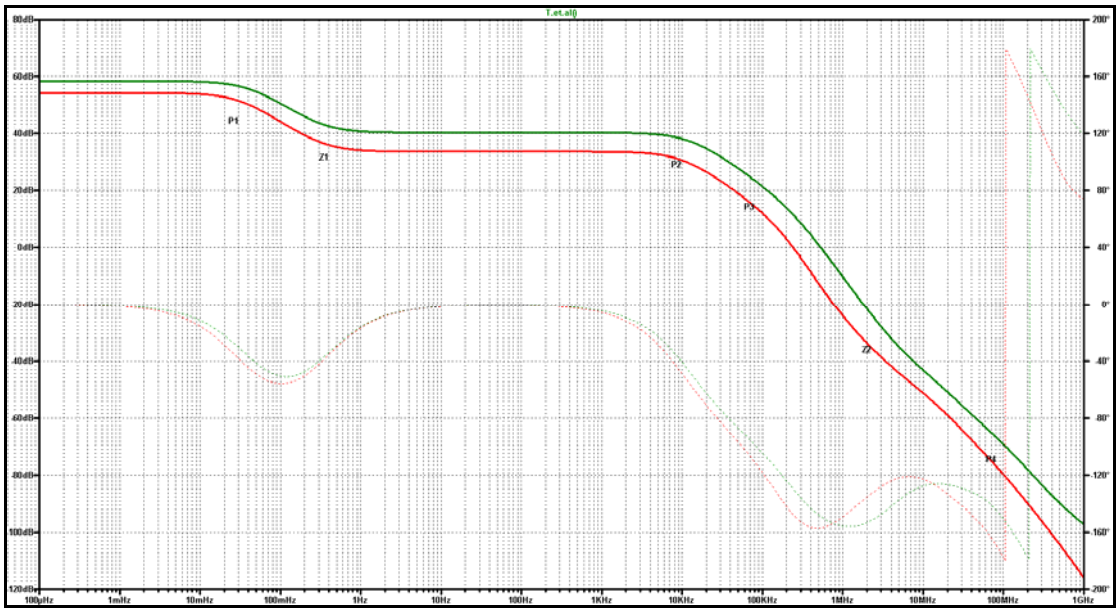

Figure 26: Overlaid Open Loop Responses. (Green – Small Signal, Red – 'proper' SPICE)

11.7. Summary of Poles and Zeros

- P1 is due to the *zero* in the feedback network
- Z1 is due to the *pole* in the feedback network
- P2 is due to the compensation capacitance and the impedance looking back towards the differential pair. Don't forget that the Miller effect changes the effective value of the compensation capacitance. The effective value of the compensation capacitance is given by multiplying its value by (1+A) where A is the stage gain of the voltage amplifier. See a circuits text for a description of the Miller effect and the "Miller transformation" or EEE331.
- P3 is principally due to the input stage base emitter capacitance and the source impedance.
- Z2 is the combined effect of the VA stage base emitter capacitance and the input stage base collector capacitances. The most dominant of these is the input side of the differential pair consequently the source impedance affects Z2. More on this shortly.
- P4 is a tricky customer, as frequency increases the model becomes less and less representative of reality, but it is safe to say that P4 is dominated by C3 and C5. If you delete C3 and C5 and leave in C16, C1, C15, C4, C20 & C19 (assuming the input and VA stages are kept as in Figure 23) then a zero is formed near to P4 and Z2 moves up in frequency very slightly. However if you leave C3 and C5 but remove C16, C1, C15, C4, C20 and C19. The amplifier response is not significantly changed. We should not be surprised to find that the slope of the magnitude plot as we get up to 1 GHz is almost dead split between 20dB/decade and 40dB/decade. The effect of these capacitances (C3 and C5 against C16, C1 etc.) act against each other. Simulation up to 10GHz or 100GHz would reveal mathematically, at least, what happens in the end. But it is not of any practical value to worry about it.

The conclusion must therefore be that the significant capacitances are C21, C22, C13, C7, C2, C14, C6, C3, and C5. If we simulate with *only* these capacitances (all others removed) the response below results.

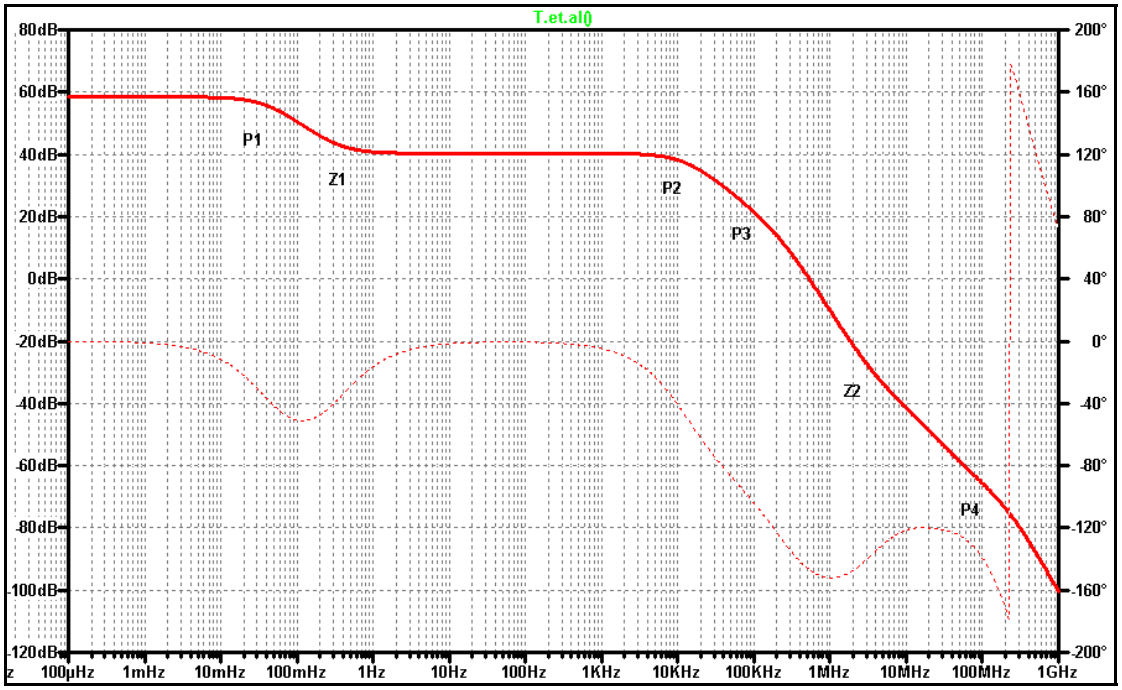

Figure 27: Small Signal amplifier with only C21, C22, C13, C7, C2, C14, C6, C3 and C5

Observe that in this figure the final slope (at 1GHz) is significantly closer to 40 dB/decade. Indicating that we have lost a zero by the removal of C16 and friends.

11.8. Driving the Amplifier

Most amplifiers will be driven by a low impedance source. The arrangement of the input resistor R6 in Figure 23 may be to ground or to the output of the preamplifier. Depending on how you wire up this part of the circuit there will be some effects on the open loop response.

It is usual to AC couple the amplifier. The diagrams in this document show that the open loop is computed with the input resistor un-bypassed. This is equivalent to running your amplifier with a preamplifier that has an output impedance equal to the biasing resistor value.

Self comments on his website that a high resistance between the preamp output and the input transistor base of the power amplifier raises distortion [88]. It's a resistor and therefore has no distortion of its own, but it does modify (to a small extent) the capability of the preamp to drive the power amp.

The input impedance of the amplifier will be large with respect to the value of R6. This is another effect of negative feedback. The feedback raises the input impedance. The same waveform should appear at the base of both input transistors simultaneously, any AC current that has to flow into the base of the input transistor is then proportional not to the size of the input waveform, but to the size of the difference between the input waveform and the feedback waveform. That is the subtraction of the, feedback reduced, output voltage and the input voltage. The input current should therefore be small, implying high input impedance. It is shown in Gray

[18] that the closed loop input impedance is the open loop input impedance (which is given by the input transistor) multiplied by (1 + G(s)H(s)).

We can lump the series resistance (R6) in with the preamplifier and say that as frequency increases and the open loop gain falls the loading effect that the power amplifier will place on the relatively high output impedance preamplifier will increase and cause potential division of the input voltage to occur, consequently higher frequency components will be proportionally smaller than lower frequency components. This will *look* like an increase in harmonic distortion, but I suspect that there are no extra harmonics involved, it's just that some of the harmonics which are already present are the wrong magnitude. Sometimes this effect is known as "linear distortion", as opposed to "non linear distortion"

If you want to simulate your amplifier driven by say a 75Ω line, a 50Ω line, a 600Ω source (all common values) or even a 0Ω source. You can, with SPICE, it will then be possible to place your open loop poles with the correct source impedance. Don't neglect the DC biasing requirements of the input stage though. See section 13 for a suitable connection.

You may wonder, how I *know* Self made the blameless amplifier first order. In short, I guessed. The placement of the 15kHz pole to give the first order open loop response is extremely suggestive. So I wrote to Self and asked him, just to make sure. He confirmed that he designed the circuit to have a first order open loop response.

12. Nyquist Diagram

Harry Nyquist was a Swedish fellow who worked at Bell. Try your favourite internet encyclopaedia for a biography. Among other things, he worked on feedback theory along with Black and Bode, the development of the fax machine, and a rather famous sampling theorem also takes his name. As usual there is at least one seminal text attached to him [25].

You can get LTSpice to draw a Nyquist diagram for an amplifier, but in practice a Bode plot is superior. A polar plot (Nyquist diagram) usually has linear axes. The low frequency open loop gain of an average power amplifier will be ~100dB. Consequently the scaling on a Nyquist diagram can make it hard to use effectively. We can establish the gain and phase margin from a Bode plot with equal ease as a Nyquist diagram. Outside control systems problems you are unlikely to see one. Some older text books deal with stability using Nyquist rather than Bode. If you are interested in understanding Nyquist diagrams, have a look:

- At Nyquist's original paper [25] (Fairly heavy going).
- On the internet [89].
- In a control systems book like Bishop and Dorf [1] Chapter 9.
- In a book about signals and systems [28].
- At some electronics circuits books [90].
- At a specialist book on feedback theory [91] (not for the faint hearted).
- Some electronic linear oscillators are best investigated using a Nyquist plot [92].

There are some situations of conditional stability, which you are unlikely to meet in amplifier design, that cannot be resolved by inspecting a Bode plot. A Nyquist diagram always works. It is a good idea to have a nodding acquaintance with them, even if they are not your first choice of analysis tool. Nyquist diagrams *can* be arranged to have axes in decibels, this makes them much more amenable to amplifier analysis.

12.1. The Rest

There are other methods for determining the stability of a closed loop system from the open loop response. These include the Routh-Hurwitz Stability Criterion, Nichols Plots, and Root Locus Method. Some of these will be covered in EEE342; most and more besides feature in Bishop and Dorf [1].

13. Using LTSPICE to plot the open loop response

The problem in amplifiers where the feedback stabilises the DC conditions is that the open loop response cannot be measured easily. We can *try* to get around this by using SPICE. In this example, LTspice is used, but almost all SPICE packages that are built on SPICE 3 will be able to perform the functions shown, the syntax may be different however.

The principle of obtaining the closed loop response from the open loop poles before closing the feedback loop, which is used by control systems designers, is reversed for our amplifier problem. We will perform a SPICE simulation of the closed loop system and extract from it the open loop behaviour. The method shown was described by Tian [3].

I assume that you have downloaded and installed LTSpice. If you're struggling with that then you have bigger problems than amplifier stability to worry about! In the LTspice folder there is an examples folder which contains a file called loopgain2.asc. A screen shot of this file is shown in Figure 28.

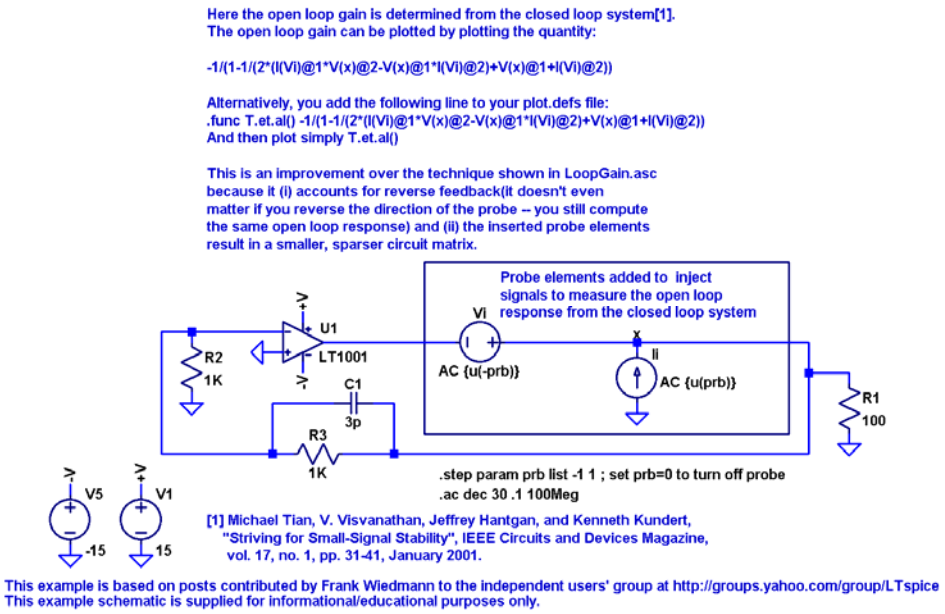

Figure 28: Loopgain2.asc

The schematic shows an operational amplifier operating in the 'non inverting' configuration, just like our power amplifier. The input has been grounded. The load resistance is R1 and the feedback resistances are R2 and R3. C1 is common in opamps and is a form of compensation. The opamp power supplies are V1 and V5. The sources Ii and Vi are used like voltage and current probes. The analysis command for this spice file is:

.ac dec 30 .1 100Meg

The .step command instructs the simulator to run the .ac simulation twice:

.step param prb list -1 1;

The term 'prb' is a parameter defined in the .step line. The simulation is run once with prb set to -1 and once with prb set to 1. The parameter prb is passed to a function u(x)

and this function is passed to the two sources Vi and Ii as the magnitude of the AC voltage to use in the simulation (see Figure 28). In LTSpice u(x) is defined as follows:

If x > 0, u(x) = 1, else u(x) = 0

It is a unit step that can be switched on or off by the value of x, which in our case is the value of prb.

The analyses are then run. First the AC magnitude of the current is set to 1, and the voltage is 0. Then the situation is reversed and the AC magnitude of the voltage is 1 when the current is zero.

We then plot:

-1/(1-1/(2*(I(Vi)@1*V(x)@2-V(x)@1*I(Vi)@2)+V(x)@1+I(Vi)@2))

I(Vi)@1 is the value of the current 'I' flowing in the component called 'Vi' (the voltage probe source) in the first simulation. It would seem appropriate to discuss what all the terms in this function mean and why it produces the open loop gain plot.

It would not be possible to give a good explanation without first describing in sufficient detail the bilateral method of examining feedback systems. To understand this properly a working knowledge of two port networks and ABCD parameters is required. Since most electronics undergraduates don't find out about these topics until their third or fourth year it would make the document too long and too complex to furnish a good explanation. Interested readers should refer to Tian et al. [3].

The method given above can be applied to any feedback circuit. The steps are:

- The input is grounded
- The probe sources are wired up as shown in Figure 28.
- The voltage source is called Vi
- The voltage source has its AC magnitude parameter set to u(-prb)
- The current source is called Ii
- The current source has its AC magnitude parameter set to u(prb)
- There is a SPICE command with *.step param prb list -1 1*
- There is a SPICE command with *.ac dec 30 1 1G* (or similar)
- The output node (point where the loudspeaker is connected) of the circuit is called x (in LTSpice you can label nodes by pressing F4)
- Run the simulation and add a plot trace with the equation above.

For ease you can add the equation to your Plot Defs file. See the LTSPICE help for how to do this.

13.1. Example Open Loop Simulation Circuit

I have said previously that the way you drive the amplifier affects the open loop response in the lower frequency region. This is an example using the Blameless amplifier.

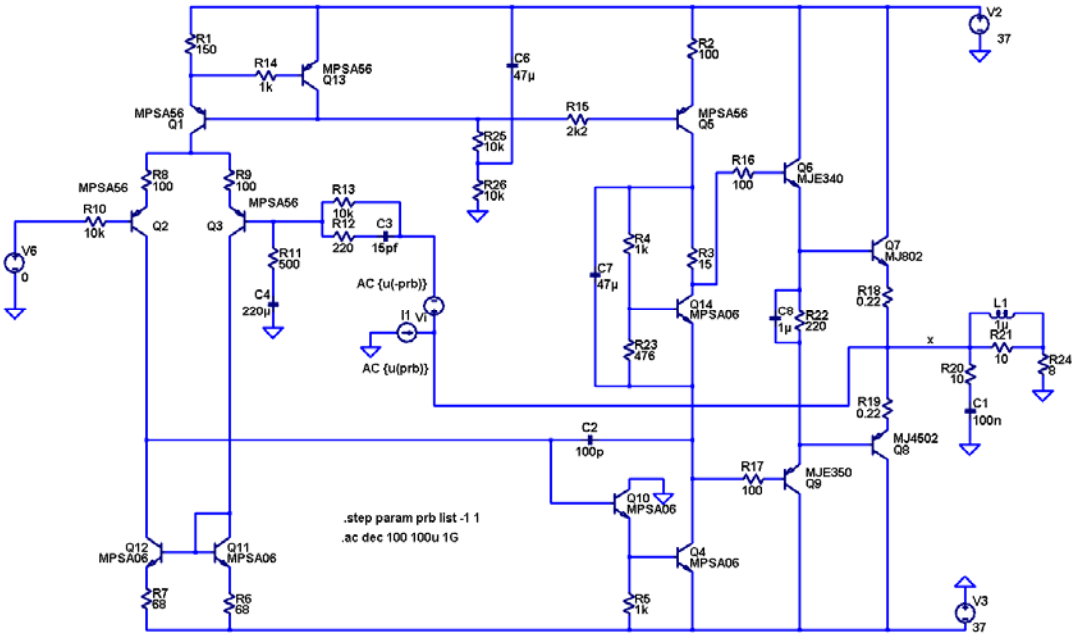

Figure 29: Blameless amplifier open loop simulation (as per Section 8)

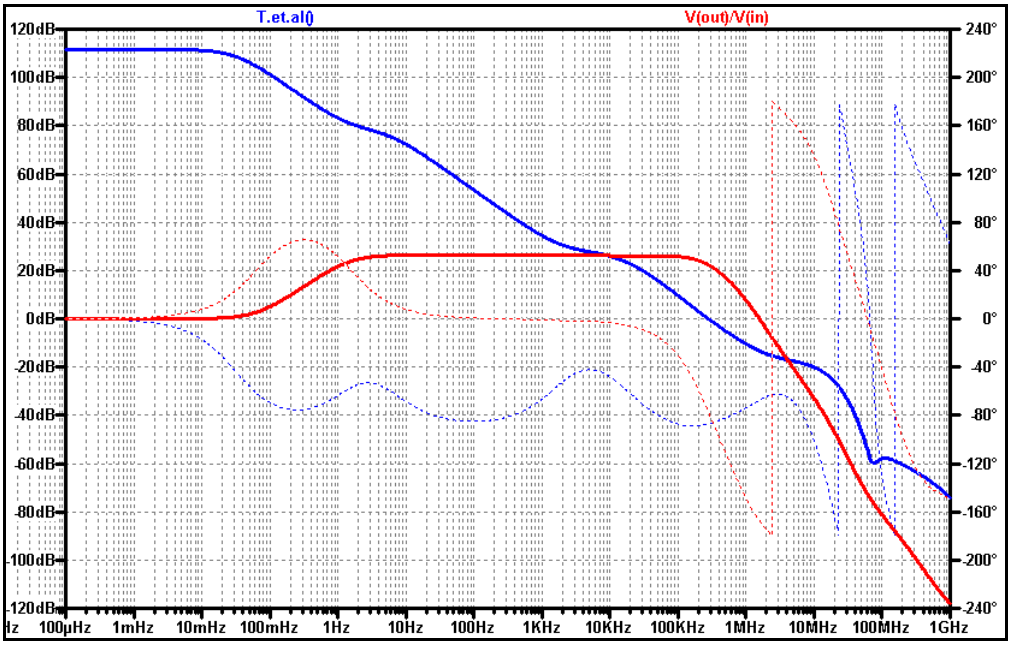

Figure 30: Response of the Blameless amplifier in Figure 29

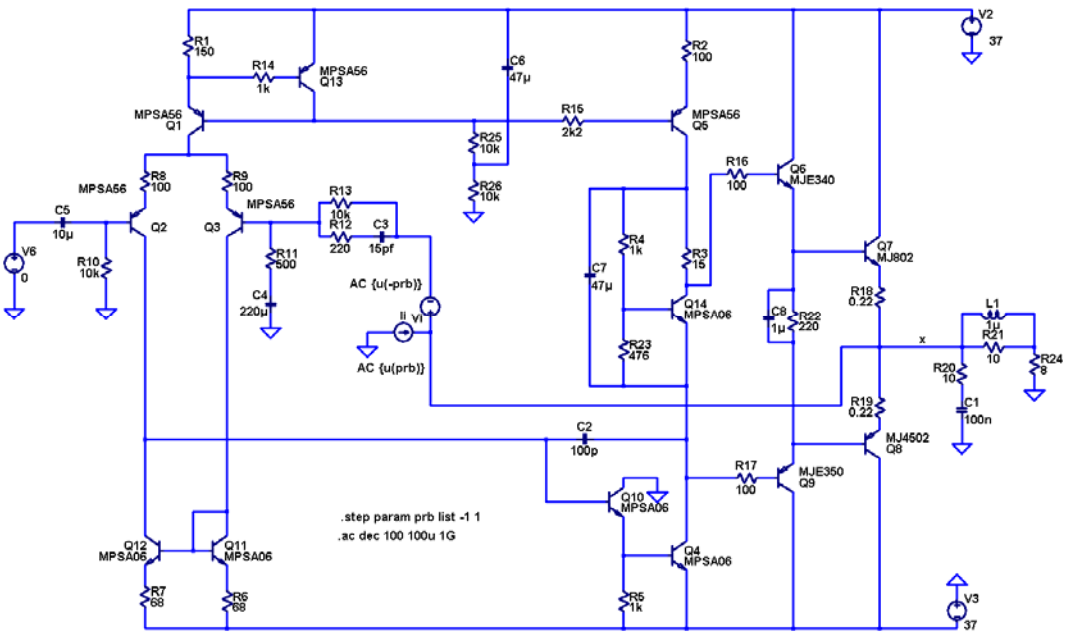

Figure 31: Blameless amplifier with modified ac input impedance

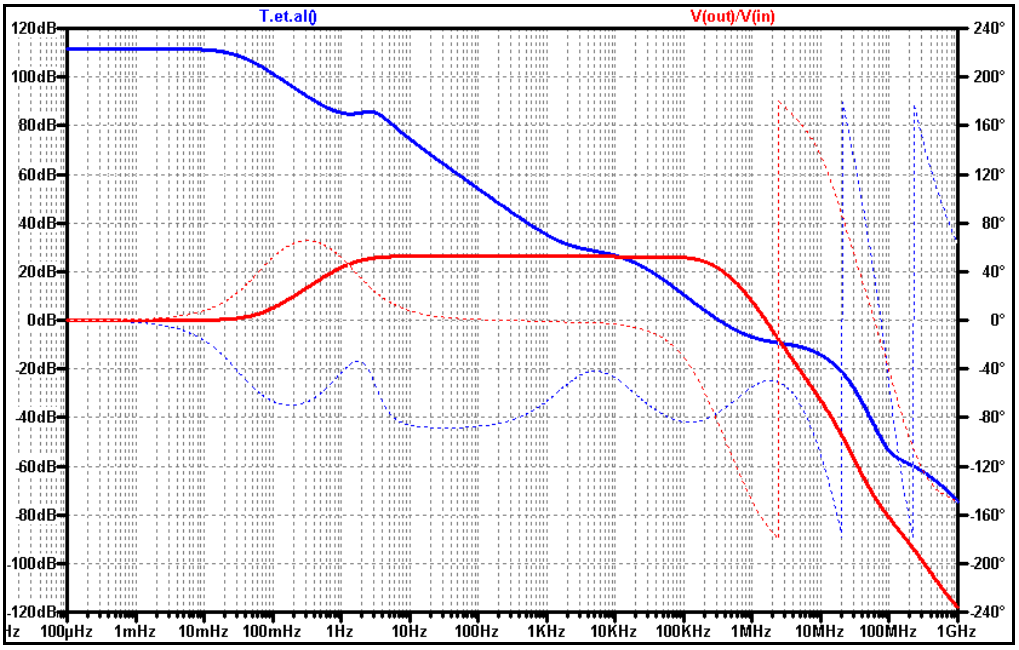

Figure 32: Response of Figure 31

Note the differences around 2.5Hz. I regard this as rather problematic, not from a design point of view, but in as much that there is no right answer to what the open loop plot should look like, it depends what you use to drive your amplifier. Using an enormous capacitance to ground is not an elegant solution, it is no more or less valid than using only the bias resistance. Happily this effect is limited to the low frequency region and does not interfere with the phase margin.

13.2. The SPICE Cave

SPICE is a parameter based modelling system. It is not perfect; in fact it is only as good as the models that are supplied. The problem is twofold:

- Some manufactures of ICs and discrete devices don't provide top flight models.
- The SPICE file will not contain parasitic effects.

It is for these two reasons that the results SPICE gives out should not be relied upon for very great accuracy. Generally if SPICE says your amplifier is stable with a phase margin of 50°, it's probably going to be stable (in the global loop at least). If SPICE says your phase margin is 5°, it is doubtful whether your amplifier will be stable. It may be that the physical construction acts to increase the phase margin and therefore make the amplifier 'more stable'. On the other hand it may be that the physical construction causes your amplifier to have a negative phase margin and it will oscillate.

It doesn't take long to check with this degree of precision if stability is to be expected or not. Designers who spend too long in front of a simulator when they are building a discrete circuit (as opposed to an IC where different rules apply) are said to be in the SPICE cave. 'SPICE cave' is a term coined by Bob Pease, who at the time of writing has just retired from an analogue design post at National Semiconductor. He is a vehement opponent of SPICE. He posts a lot of interesting analogue material on the internet, usually under titles such as "What's all this [insert subject here] stuff about anyhow?"[93]. He's written some interesting books and book sections for students and professional engineers [94-96]. He designed the LM31x series of variable voltage regulators.

On the other hand, SPICE has been around for quite a while (try the internet for a history of SPICE development), and it's popular, so it shouldn't be taken too lightly. It is like any other source of information; *you have to assess the quality of its output based on your knowledge and experience*.

14. Gender in Engineering and Physical Science

If you read on the history of engineering and physical science, and I cannot think of a reason why you wouldn't. You cannot have failed to notice that historically, in western society, there has been a large gender imbalance in engineering and physical science. This is often discussed by everyone from CEOs of multinational engineering companies to university chancellors to prospective undergraduates, I don't think a few words would be out of place.

The imbalance of gender in engineering, which has been present from the conception of engineering in the modern sense, is yet to be fully redressed. Any survey of the history of engineering and the physical sciences will turn up a host of men and relatively few fortunate and often privileged women. If you ask a social scientist they will be able to illuminate the present thinking on why this is far more eloquently than I am able. I shall therefore limit myself to: It is a shame because there is no reason that either gender should make better or worse engineers than the other.

Incidentally the only person ever to win two Nobel Prizes, in physics *and* chemistry, was a woman [4]. The person who developed the concept of the private research institute and executed the construction of a fine example [11] was female, she also was the first to state, with proof, that $k_e = ½ m v^2$, not as Newton and all his chums believed $k_e = ½ m v$.

The person who proved the theory that DNA is a double helix was Rosalind Franklin [13]. Unfortunately she did not receive credit for doing the experiments that provided the proof. The Nobel prize went to the people who came up with the model. This is a considerable injustice in my view. Models are just guesses until proof is provided. The Nobel prize was not awarded because she died before consideration, Nobel prizes are not awarded posthumously.

On the subject of posthumous Nobel prize injustice, Ghandi was not awarded a Nobel prize, but I digress.

The idea that engineering and physical science are professions in which males have a natural advantage should be banished to the pages of historical works as soon as possible. Anyone mentioning the idea that men are better at 3D visualisation and logic problems etc. is somewhat behind the debate, do keep up! That said if you *are* unable to keep up, you'll be in the company of some quite influential people [97].

The IEEE have their own women's section [98].

15. References

[1] R. C. Bishop and R. H. Dorf, *Modern Control Systems*, 10th ed.: Prentice Hall, 2005.
[2] F. L. Lewis, *Applied Optimal Control and Estimation*: Prentice-Hall, 1992.
[3] M. Tian, *et al.*, "Striving for Small-Signal Stability," *IEEE Circuits and Devices Magazine,* vol. 17, pp. 31 - 41, January 2001.
[4] M. Kumar, *Quantum: Einstein, Bohr and the great debate about the nature of reality*: Icon Books, 2008.
[5] D. Sobel, *The Planets*: Fourth Estate, 2005.
[6] G. Watson, *The Civils: The story of the Institution of Civil Engineers*: Thomas Telford, 1988.
[7] R. W. Clark, *Einstein*: Hodder & Stoghton, 1996.
[8] A. I. Miller, *Empire of the Stars*: Little Brown, 2005.
[9] M. Smith, *Station X*: Channel 4 Books, 1998.
[10] R. Holmes, *The Age Of Wonder*: Harper Press, 2008.
[11] D. Bodanis, $E = MC^2$: Macmillan, 2000.
[12] A. Smith, *Moon Dust*: Bloomsbury, 2005.
[13] B. Bryson, *A Short History of Nearly Everything*: Random House, 2004.
[14] D. Sobel, *Longitude*: Fourth Estate, 1998.
[15] S. Hawking, *God Created The Integers*: Penguin Books, 2005.
[16] D. Berlinski, *A Tour of The Calculus: The Philosophy of Mathematics*: William Heinemann, 1996.
[17] D. Bodanis, *Electric Universe*: Abacus, 2006.
[18] P. R. Grey, *et al.*, *Analysis and Design of Analog Integrated Circuits*, 4th ed.: Wiley, 2001.
[19] M. Jones, *Valve Amplifiers*, 3 ed.: Newnes, 2003.
[20] H. C. Lin, "Semiconductor Amplifier Circuits," United States of America Patent 2,896,029, 1959.
[21] H. W. Bode, *Network Analysis and Feedback Amplifier Design*: Van Nostrand Rhinhold, 1945.
[22] M. E. V. Valkenburg, *Analogue Filter Design*: Saunders Press an imprint of Holt Rinehart and Winston, 1982.
[23] H. S. Black, "Wave Translation System," United States of America Patent 2,102,671, 1937.
[24] H. S. Black, "Stabilised Feedback Amplifiers," *Proceedings of the IEEE,* vol. 87, pp. 379 - 385 1999.
[25] H. Nyquist, "Regeneration Theory," *Bell System Technical Journal,* vol. 11, pp. 126 - 147, 1932 Try:
http://media.johnwiley.com.au/product_data/excerpt/14/07803602/0780360214.pdf.
[26] I. E. Getreu, *Modelling the Bipolar Transistor*: Tectronix Inc., 1978.
[27] Jennic. *A Sheffield Based Fabless Semiconductor Company*. Available: http://www.jennic.com/
[28] A. V. Oppenheim and A. S. Willsky, *Signals and Systems*, 2nd ed.: Prentice Hall, 1997.
[29] R. J. Smith and R. C. Dorf, *Circuits Devices and Systems*: Wiley, 1992.
[30] J. W. Nilsson and S. A. Riedel, *Electric Circuits*: Prentice Hall, 2001.
[31] *LTSPICE*. Available: http://www.linear.com
[32] *NGSPICE*. Available: http://ngspice.sourceforge.net
[33] *SPICE OPUS*. Available: http://spiceopus.si

[34] *QUCS (Not strictly SPICE, but very similar)*
Available: http://qucs.sourceforge.net
[35] *ICAPS*. Available: http://www.intusoft.com
[36] *HSPICE*. Available: http://www.synopsys.com
[37] *SIMetrix*. Available: http://www.simetrix.co.uk
[38] *'Berkeley' SPICE*
Available: http://bwrc.eecs.berkeley.edu/Classes/icbook/SPICE
[39] *ORCAD*. Available: http://www.orcad.com
[40] *MultiSim*. Available: http://www.ni.com/multisim
[41] *SuperSpice*. Available: http://www.anasoft.co.uk
[42] *B^2Spice*. Available: http://www.beigebag.com
[43] *5 Spice*. Available: http://www.5spice.com
[44] *WinSpice*. Available: http://www.winspice.com
[45] *Sapwin - Analytical Linear Circuit Analysis Software*
Available: http://cirlab.det.unifi.it/Sapwin
[46] D. E. Muller, "A Method for Solving Algebraic Equations Using a Computer," *Mathematical Tables and Other Aids to Computation (MTAC),* vol. 10, pp. 208 - 215, 1956.
[47] G. Massobrio and P. Antongnetti, *Semiconductor Device Modeling with SPICE*, 3nd ed.: McGraw Hill, 1998.
[48] H. Sennewald. *Why doesn't LTSpice have a .pz?*
. Available: http://tech.groups.yahoo.com/group/LTspice/message/30943
[49] *LTSpice Yahoo! Users Group*
Available: http://tech.groups.yahoo.com/group/LTspice
[50] *A good example of Maple used in symbolic circuit analysis and simulation*. Available: http://www.maplesoft.com/applications/view.aspx?SID=1427
[51] R. Small, "Direct Radiator Loudspeaker Systems Analysis," *JAES,* vol. 20, June 1972.
[52] R. Small, "Closed-Box Loudspeaker Systems Part 1: Analysis," *JAES,* vol. 20, December 1972.
[53] R. Small, "Closed-Box Loudspeaker Systems Part 2: Synthesis," *JAES,* vol. 21, January 1973.
[54] R. Small, "Vented-Box Loudspeaker Systems Part 1: Small Signal Analysis," *JAES,* vol. 21, June 1973.
[55] R. Small, "Vented-Box Loudspeaker Systems Part 2: Large Signal Analysis," *JAES,* vol. 21, July/August 1973.
[56] R. Small, "Vented-Box Loudspeaker Systems Part 3: Synthesis," *JAES,* vol. 21, September 1973.
[57] R. Small, "Vented-Box Loudspeaker Systems Part 4: Appendices," *JAES,* vol. 21, October 1973.
[58] V. Dickason, *Loudspeaker Design Cookbook*, 7th ed.: Audio Armature Press, 2006.
[59] C. P. Steinmetz, *Theory and Calculation of AC Phenomena*: McGraw Hill, 1897.
[60] C. P. Steinmetz, *Theory and Calculation of Transient Electric Phenomena and Oscillations*: McGraw Hill, 1920
Try: http://www.archive.org/details/theoryandcalcul00steigoog.
[61] *Proteus* Available: http://www.labcenter.co.uk
[62] *Linear X*. Available: http://www.linearx.com
[63] *WinISD Alpha Pro*

Available: http://www.linearteam.dk/default.aspx?pageid=winisdpro
[64] *NEXO "Alpha" PA system*. Available: http://www.nexo-sa.com
[65] *Sheffield Union Technical Services Committee*
Available: http://www.tsc.union.shef.ac.uk
[66] P. Brenchley, *Technical Services Committee Manual*: University Of Sheffield, 2004.
[67] D. Self, *Audio Power Amplifier Design Handbook*, 5th ed.: Focal Press, 2009.
[68] D. Self, *Small Signal Audio Design*: Focal Press, 2010.
[69] *Electronics World*. Available: http://www.electronicsworld.co.uk
[70] *Elektor Electronics*. Available: http://www.elektor.com
[71] M. J. Hawksford, "Optimization of the Amplified-Diode Bias Circuit for Audio Amplifiers " *JAES,* vol. 32, pp. 31 - 33, Jan/Feb 1984 Try:
http://www.essex.ac.uk/csee/research/audio_lab/malcolms_publications.html.
[72] R. Mancini and B. Carter, *Opamps For Everyone*, 3rd ed.: Newnes, 2009.
[73] R. Elliot. *Simple Current Feedback Power Amplifier*
Available: http://sound.westhost.com/project12.htm
[74] B. V. Segment, *Build Your Own High End Equipment*: Elektor Electronics Publishing, 1995.
[75] M. Alexander, *Analog Devices Application Note AN-211 "The Alexander Current-Feedback Audio Power Amplifier" (This is a quite interesting design, not for the feint hearted though)*
[76] B. Goldacre, *Bad Science*, 4th ed.: Fourth Estate, 2008.
[77] *Hi-Fi News and Record Review*. Available: www.hifinews.co.uk
[78] B. Duncan, *High Performance Audio Power Amplifiers*: Newnes, 1996.
[79] *Hi-Fi Collective - A Subjective Review (or Two)*
Available: http://www.hificollective.co.uk/catalog/glasshouse-passive-preamplifier-pri-459.html?reviews_id=7
[80] *Technics SB-F2 "Linear Phase" Loudspeaker System*
Available: http://www.thevintageknob.org/TECHNICS/SBF1/SBF1.html
[81] *A Car Audio Website*
Available: http://www.the12volt.com/caraudio/caraudio.asp
[82] F. Rumsey, "Sound In Motion: Automotive Audio Drives Forward," *JAES,* vol. 57, November 2009.
[83] B. G. Streetman and S. Banerjee, *Solid State Electronic Devices* 5th ed.: Prentice Hall, 1999.
[84] B. V. Zeghbroeck. *Online book about Semiconductors*
Available: http://ecee.colorado.edu/~bart/book
[85] H. K. Gummel and H. C. Poon, "An Integral Charge Control Model of Bipolar Transistors," *Bell Syst. Tech. Journal,* vol. 49, pp. 827 - 842, 1970 (This paper is in the Western Bank Library).
[86] Agilent. *A Gummel Poon Document*
Available: http://www.electronics.oulu.fi/Opetus/ELJK/JUTUT/GP_DOCU.pdf
[87] *SPICE Manual*. Available:
http://newton.ex.ac.uk/teaching/CDHW/Electronics2/userguide/sec3.html#3.4.3
[88] D. Self. *Source Impedance*. Available:
http://www.dself.dsl.pipex.com/ampins/library/comments1.htm#earache
[89] *Nyquist Plots*. Available:
http://www.engin.umich.edu/group/ctm/freq/nyq.html

[90] E. J. Angelo, *Electronic Circuits: A unified treatment of vacuum tubes and transistors*: McGraw Hill, 1964 (This book is representative of a style of book produced at this time that deal with transistors, valves and feedback theory).
[91] F. D. Waldhauer, *Feedback*: New York, Chichester, Wiley, 1984, St Georges Library, Shelf Mark 621.381535 (W).
[92] W. A. Edson, *Vacuum Tube Oscillators*, 1953
Try: http://www.tubebooks.org/technical_books_online.htm.
[93] B. Pease. Available: http://www.national.com/rap/ by way of example: http://www.national.com/rap/Story/0,1562,9,00.html
[94] T. Williams, *Analog Circuit Design: Art, Science, & Personalities*: Butterworth-Heinemann, 1991.
[95] T. Williams, *The Art & Science of Analog Circuit Design*: Butterworth-Heinemann, 1995.
[96] R. Pease, *Troubleshooting Analog Circuits*: Newnes, 1991.
[97] *Larry Summers*. Available:
http://en.wikipedia.org/wiki/Lawrence_Summers#Differences_between_the_sexes
[98] *IEEE Women in Engineering*. Available:
http://www.ieee.org/web/membership/women/index.html